RAINBOW MUNICIPAL WATER DISTRICT
Committed to Excellence

BOARD MEETING

RAINBOW MUNICIPAL WATER DISTRICT
Tuesday, August 22, 2017
Closed Session – Time: 12:00 p.m.
Open Session - Time: 1:00 p.m.

THE PURPOSE OF THE REGULAR BOARD MEETING IS TO DISCUSS THE ATTACHED AGENDA

District Office **3707 Old Highway 395** **Fallbrook, CA 92028**

Board Agenda Policies

Board of Directors Meeting Schedule Regular Board meetings are normally scheduled for the 4th Tuesday of the month with Open Session discussions starting time certain at 1:00 p.m.

Breaks It is the intent of the Board to take a ten minute break every hour and one-half during the meeting.

Public Input on Specific Agenda Items and those items not on the Agenda, Except Public Hearings Any person of the public desiring to speak shall fill out a "Speaker's Slip", encouraging them to state their name, though not mandatory. Such person shall be allowed to speak during public comment time and has the option of speaking once on any agenda item when it is being discussed. Speaking time shall generally be limited to three minutes, unless a longer period is permitted by the Board President.

Public Items for the Board of Directors' agenda must be submitted in writing and received by the District office no later than 10 business days prior to a regular Board of Directors' Meeting.

Agenda Posting and Materials Agendas for all regular Board of Directors' meetings are posted at least seventy-two hours prior to the meeting on bulletin boards outside the entrance gate and the main entrance door of the District, 3707 Old Highway 395, Fallbrook, California 92028. The agendas and all background material may also be inspected at the District Office.

You may also visit us at www.rainbowmwd.com.

Time Certain Agenda items identified as "time certain" indicate the item will not be heard prior to the time indicated.

Board meetings will be recorded as a secretarial aid. If you wish to listen to the recordings, they will be available after the draft minutes of the meeting have been prepared. There is no charge associated with copies of recordings. Recordings will be available until the minutes of such meeting are approved. Copies of public records are available as a service to the public; a charge of $.10 per page up to 99 pages will be collected and $.14 per page for 100 pages or more.

If you have special needs because of a disability which makes it difficult for you to participate in the meeting or you require assistance or auxiliary aids to participate in the meeting, please contact the District Secretary, (760) 728-1178, by at least noon on the Friday preceding the meeting. The District will attempt to make arrangements to accommodate your disability.

(*) - Asterisk indicates a report is attached.

Notice is hereby given that the Rainbow Municipal Water District Board of Directors will hold Closed Session at 12:00 p.m. and Open Session at 1:00 p.m. Tuesday, August 22, 2017, at the District Office located at 3707 Old Highway 395, Fallbrook, CA 92028. At any time during the session, the Board of Directors Meeting may adjourn to Closed Session to consider litigation or to discuss with legal counsel matters within the attorney client privilege.

AGENDA

1. **CALL TO ORDER**

2. **ROLL CALL: Brazier____ Hamilton____ Gasca____ Mack____ Stewart____**

3. **ADDITIONS/DELETIONS/AMENDMENTS TO THE AGENDA (Government Code §54954.2)**

4. **ORAL/WRITTEN COMMUNICATIONS FROM THE PUBLIC**
   OPPORTUNITY FOR MEMBERS OF THE PUBLIC TO ADDRESS THE BOARD REGARDING CLOSED SESSION AGENDA ITEMS (Government Code § 54954.2).
   Under Oral Communications, any person wishing to address the Board on matters regarding the Closed Session agenda should indicate their desire to speak by filling out and submitting a "Speaker's Slip" to the Board Secretary before the meeting begins. *Speaking time shall generally be limited to three minutes, unless a longer period is permitted by the Board President.*

5. **CLOSED SESSION**

   A. Appointment, Employment; Evaluation of Performance – General Manager (Government Code §54957)

6. **REPORT ON POTENTIAL ACTION FROM CLOSED SESSION**

Time Certain: 1:00 p.m.

7. **PLEDGE OF ALLEGIANCE**

8. **REPEAT REPORT ON POTENTIAL ACTION FROM CLOSED SESSION**

9. **REPEAT ADDITIONS/DELETIONS/AMENDMENTS TO THE AGENDA (Government Code §54954.2)**

10. **ORAL/WRITTEN COMMUNICATIONS FROM THE PUBLIC**
    OPPORTUNITY FOR MEMBERS OF THE PUBLIC TO ADDRESS THE BOARD REGARDING ITEMS NOT ON THIS AGENDA (Government Code § 54954.2).
    Under Oral Communications, any person wishing to address the Board on matters not on this agenda should indicate their desire to speak by filling out and submitting a "Speaker's Slip" to the Board Secretary before the meeting begins. *No action will be taken on any oral communications item since such item does not appear on this Agenda, unless the Board of Directors makes a determination that an emergency exists or that the need to take action on the item arose subsequent to posting of the Agenda* (Government Code §54954.2*). Speaking time shall generally be limited to three minutes, unless a longer period is permitted by the Board President.*

11. **ANNIVERSARY ACKNOWLEDGEMENT**
    A. Chris Waite (10 Years)

(*) - Asterisk indicates a report is attached.

***12. APPROVAL OF MINUTES**

A. July 25, 2017 - Regular Board Meeting

13. BOARD OF DIRECTORS' COMMENTS/REPORTS

Directors' comments are comments by Directors concerning District business, which may be of interest to the Board. This is placed on the agenda to enable individual Board members to convey information to the Board and to the public. There is to be no discussion or action taken by the Board of Directors unless the item is noticed as part of the meeting agenda.

A. President's Report (President Brazier)
B. Representative Report (Appointed Representative)
  1. SDCWA
    A. Summary of Board Meeting July 27, 2017
  2. CSDA
  3. LAFCO
  4. San Luis Rey Watershed Council
  5. Santa Margarita Watershed Council
C. Meeting, Workshop, Committee, Seminar, Etc. Reports by Directors (AB1234)
D. Directors Comments
E. Legal Counsel Comments
  1. Attorney Report: Employment Law Update (501668-0002)

***14. COMMITTEE REPORTS (Approved Minutes have been attached for reference only.)**

A. Budget and Finance Committee
  1. May 9, 2017 Minutes
  2. July 11, 2017 Minutes
B. Communications Committee
  1. July 10, 2017 Minutes
C. Engineering Services Committee
  1. July 5, 2017 Minutes

BOARD ACTION ITEMS

***15. DISCUSSION AND POSSIBLE ACTION TO APPROVE A VARIANCE FROM THE DISTRICT'S ADMINISTRATIVE CODE AND ALLOW THE SMITH FAMILY TRUST TO TRANSFER AND RELOCATE METER FROM PARCEL 108-291-43 TO PARCEL 108-291-28**

(Raymond Smith of the Smith Family Trust is requesting a variance to the Administrative Code to allow him to relocate and transfer a meter from non-abutting parcels that he owns on Yucca Road. The parcels are 180 feet away from each other. The Administrative Code requires that the parcels be abutting and owned by the same owner.)

***16. DISCUSSION AND POSSIBLE ACTION TO PROCEED WITH DESIGN FOR THE ROBERT A. WEESE FILTRATION PLANT INTERCONNECT**

(An update to the Weese Filtration Plant Interconnect project.)

***17. DISCUSSION AND POSSIBLE ACTION TO ADOPT ORDINANCE NO. 17-10 AMENDING AND UPDATING ADMINISTRATIVE CODE CHAPTER 9.05 – SEWER PERMITS**

(The provisions of the Administrative Code related to various sewer policies were reviewed as part of the change in the sewer capacity fees. At the July 25, 2017 Board Meeting the Board adopted revisions to the policy in relation to the capacity fees. Based on the review of staff and the Engineering Services Committee, additional revisions are proposed to update the sewer policy.)

(*) - Asterisk indicates a report is attached.

***18. DISCUSSION AND POSSIBLE ACTION TO ADOPT ORDINANCE NO. 17-11 REVISING APPENDIX A WATER AND SEWER RATES AND CHARGES**

(This is an administrative correction to update Ordinance No. 17-07 with Ordinance No. 17-11. This revises Section 9 to reference both Resolution No. 16-20 and Ordinance No. 17-07 and provide the appropriate Appendix A. There are no changes to rates or fees with this adoption. Ordinance No. 17-11 combines Exhibit 1 from Resolution No. 16-20 and Ordinance No. 17-07.)

***19. DISCUSSION AND POSSIBLE ACTION TO APPROVE RESOLUTION NO. 17-23 DESIGNATING AN AUTHORIZED REPRESENTATIVE TO SUBMIT AN APPLICATION, EXECUTE AN AGREEMENT AND ANY AMENDMENTS, AND CERTIFY FUNDING DISBURSEMENTS WITH THE STATE OF CALIFORNIA FOR A DESALINATION GRANT**

(The State of California through Department of Water Resources is receiving applications for grant funding for desalination projects. This item is requesting authorization to apply for available funding for feasibility studies of a brackish desalter in the Bonsall basin.)

***20. DISCUSSION AND POSSIBLE ACITON TO APPROVE RESOLUTION NO. 17-24 – A RESOLUTION OF THE BOARD OF DIRECTORS OF RAINBOW MUNICIPAL WATER DISTRICT ESTABLISHING CLASSIFICATIONS AND MONTHLY PAY RANGES FOR DISTRICT EMPLOYEES AND THE GENERAL MANAGER EFFECTIVE AUGUST 29, 2017 THROUGH JUNE 30, 2018**

(In compliance with state and CalPERS regulations, the District maintains a Salary Grade structure that includes all job titles, salary grade levels, and monthly salary ranges for each grade. The table is available for public review, accessible from the RMWD website, and is published on a website hosted by the California State Controller.)

21. DISCUSSION AND POSSIBLE ACTION REGARDING THE APPOINTMENT; EMPLOYMENT; EVALUATION OF PERFORMANCE; OR COMPENSATION OF THE GENERAL MANAGER

(The General Manager's contract includes a provision for annual cost of living adjustments based on the change in the San Diego County for the most recent 12-month period for which data is available.)

***22. CONSIDER CHANGE ORDER WITH INFOR PUBLIC SECTOR FOR THE PROCUREMENT OF UTILITY BILLING SOFTWARE, SOFTWARE HOSTING, AND SOFTWARE SUPPORT AND IMPLEMENTATION SERVICES**

(This agenda item is to consider approval of a change order with Infor Public Sector (hereafter Infor) for the procurement of Customer Relationship Management (CRM) and Utility Billing (UB) software from Infor. This software would replace the CRM and UB components of the current financial software package from Accela Springbrook.)

23. AUTHORIZATION TO ATTEND UPCOMING MEETINGS / CONFERENCES / SEMINARS

***24. RECEIVE AND FILE INFORMATION AND FINANCIAL ITEMS FOR JUNE/JULY/AUGUST 2017**

- **A. General Manager Comments**
  - **1.** Meetings, Conferences and Seminar Calendar
- **B. Communications**
  - **1.** Ratepayer Communications
- **C. Operations Comments**
  - **1.** Operations Report
- **D. Engineering Comments**
  - **1.** Engineering Report
- **E. Customer Service Comments**
  - **1.** Customer Service Report
- **F. Human Resource & Safety Comments**
  - **1.** Human Resources Report

(*) - Asterisk indicates a report is attached.

G. Finance Manager Comments

1. Interim Financial Statement
2. Credit Card Breakdown
3. Directors' Expense
4. Check Register
5. Water Sales Summary
6. RMWD Sewer Equivalent Dwelling Units (EDU's) Status

25. LIST OF SUGGESTED AGENDA ITEMS FOR THE NEXT REGULAR BOARD MEETING

26. ADJOURNMENT - To Tuesday, September 25, 2017 at 1:00 p.m.

ATTEST TO POSTING:

FOR Hayden Hamilton
Secretary of the Board

8-14-17 @ 12:00 P.M.
Date and Time of Posting
Outside Display Cases

(*) - Asterisk indicates a report is attached.

DRAFT *DRAFT* *DRAFT*

**MINUTES OF THE REGULAR BOARD MEETING
OF THE BOARD OF DIRECTORS OF THE
RAINBOW MUNICIPAL WATER DISTRICT
JULY 25, 2017**

1. **CALL TO ORDER -** The Regular Meeting of the Board of Directors of the Rainbow Municipal Water District on July 25, 2017 was called to order by President Brazier at 12:03 p.m. in the Board Room of the District, 3707 Old Highway 395, Fallbrook, CA 92028. President Brazier presiding.

2. **ROLL CALL**

Present: Director Brazier, Director Mack, Director Stewart, Director Gasca.

Also Present: General Manager Kennedy, Legal Counsel Smith, Executive Assistant Washburn, Administrative Analyst Gray, Associate Engineer Powers, Engineering Manager Kirkpatrick, Human Resources Manager Harp, Superintendent Zuniga.

Absent: Director Hamilton, Finance Manager Martinez, Operations Manager Milner, Superintendent Maccarrone.

No members of the public were present before Open Session. Three members of the public were present for Open Session.

3. **ADDITIONS/DELETIONS/AMENDMENTS TO THE AGENDA (Government Code §54954.2)**

There were no changes to the agenda.

4. **ORAL/WRITTEN COMMUNICATIONS FROM THE PUBLIC
OPPORTUNITY FOR MEMBERS OF THE PUBLIC TO ADDRESS THE BOARD REGARDING CLOSED SESSION AGENDA ITEMS (Government Code § 54954.2).**

There were not comments.

The meeting adjourned to Closed Session at 12:04 p.m.

5. **CLOSED SESSION**

A. Appointment, Employment; Evaluation of Performance – General Manager (Government Code §54957)

6. **REPORT ON POTENTIAL ACTION FROM CLOSED SESSION**

The meeting reconvened at 1:32 p.m.

(*) - Asterisk indicates a report is attached.

Time Certain: 1:00 p.m.

7. PLEDGE OF ALLEGIANCE

8. REPEAT REPORT ON POTENTIAL ACTION FROM CLOSED SESSION

President Brazier stated there was no reportable action.

9. REPEAT ADDITIONS/DELETIONS/AMENDMENTS TO THE AGENDA (Government Code §54954.2)

There were no changes to the agenda.

10. ORAL/WRITTEN COMMUNICATIONS FROM THE PUBLIC OPPORTUNITY FOR MEMBERS OF THE PUBLIC TO ADDRESS THE BOARD REGARDING ITEMS NOT ON THIS AGENDA (Government Code § 54954.2).

Jeanne Meadow introduced herself to the Board noting she is very interested in the water industry. She asked for a status update on the report of the District's leased properties. She requested a copy of such report should there be one available. President Brazier noted the need for this report has been reaffirmed today.

Mrs. Meadow asked about the status of the report on large delinquent accounts. Mr. Kennedy noted the Administrative Code has been updated over the few years to provide more stringent policies for addressing delinquent accounts.

Mrs. Meadow referenced the recent water quality report as she inquired as to why Lake Skinner and Twin Oaks were included in the report when RMWD is not receiving much water from either resource. Mr. Kennedy pointed out RMWD has no control over which of the two resources provides the District with water due to the fact RMWD is located in the middle of the blending point; however, if necessary an estimate of how much water comes from each could be produced. Discussion followed.

11. ANNIVERSARY ACKNOWLEDGEMENT

A. Gerardo Cancino (10 Years)

Mr. Kennedy mentioned Gerardo Cancino normally works in Valve Maintenance; however, for the past several months he has been taken over the purchasing and warehouse department while an employee is out on extended leave. Mr. Cancino was presented with a plaque and check in recognition of his tenure.

B. Clem Taylor (10 Years)

Mr. Kennedy noted Clem Taylor works in the Meters Department and deals with the RMWD customers on a regular basis. Mr. Taylor was presented with a plaque and check in recognition of his tenure.

C. Jerry Kraft (10 Years)

Mr. Kennedy noted Jerry Kraft works as a system operator in the Water Operations Department. He pointed out Mr. Kraft has also assisted the District by helping out in other departments when necessary. Mr. Kraft was presented with a plaque and check in recognition for his tenure.

***12. APPROVAL OF MINUTES**

A. June 20, 2017 – Special Board Meeting
B. June 27, 2017 - Regular Board Meeting
C. July 6, 2017 – Special Board Meeting

Director Stewart referenced Page 15 noting the comment made during the Engineering Services report should be corrected. Mrs. Kirkpatrick offered to provide the correct language on this item.

Director Stewart referenced Page 17 pointed out "Legislative Days" should be "CSDA Leadership Academy" in the motion. He also stated his intention for the motion was for all Directors who attended the academy receive a per diem for each day they attended the conference, not just Director Mack. President Brazier said she has listened to the entire meeting recording for a second time and the motion was specific for Director Mack and not the other Board Members. Director Stewart said based on this information, there was no need to revise the minutes except for the name of the conference.

Motion:

Approve the minutes as revised.

Action:

Action: Approve, Moved by Director Gasca, Seconded by Director Mack.

Vote: Motion carried by unanimous vote (summary: Ayes = 4).

Ayes: Director Brazier, Director Mack, Director Stewart, Director Gasca.

13. BOARD OF DIRECTORS' COMMENTS/REPORTS

Directors' comments are comments by Directors concerning District business, which may be of interest to the Board. This is placed on the agenda to enable individual Board members to convey information to the Board and to the public. There is to be no discussion or action taken by the Board of Directors unless the item is noticed as part of the meeting agenda.

A. President's Report (President Brazier)

Director Brazier suggested there be a requirement included in the Administrative Code that Directors read the materials provided on the Ralph M. Brown Act (Open & Public). Mr. Kennedy pointed out Board Members are required to complete AB1234 training immediately after being elected to their seat on the Board and how AB1234 covers the Brown Act. Discussion followed. Director Stewart reported he has read all the materials provided on the Brown Act. He also noted each of the Directors present at the recent conference were very cautious about making sure not to violate the Act while in attendance.

(*) - Asterisk indicates a report is attached.

B. Representative Report (Appointed Representative)

1. SDCWA

A. Summary of Board Meeting June 22, 2017

Mr. Kennedy pointed out SDCWA plans to give a pump station to RMWD; therefore, he will be executing a small agreement to discuss the formal agreement. He noted RMWD would need to restructure one of its pipelines to serve as a suction line. He talked about the steps to be taken should this project move forward.

2. CSDA

There was no report given.

3. LAFCO

Mr. Kennedy announced there was a gathering to take place during the August 7, 2017 LAFCO meeting to honor those employees retiring and resigning from LAFCO, including Michael Ott and Harry Ehrlich.

4. San Luis Rey Watershed Council

Director Stewart reported the Council was getting organized to start getting more active. He stated he would like to get more information from RMWD as to what the District may like to see come from the Council that would be beneficial.

5. Santa Margarita Watershed Council

There was no report given.

C. Meeting, Workshop, Committee, Seminar, Etc. Reports by Directors (AB1234)

Director Mack reported the CSDA Leadership Academy was phenomenal and recommends this conference be mandatory for all new Board Members. He mentioned he had a new appreciation for how the RMWD Board operates. He found the interactive courses beneficial in providing examples of Board conduct including funneling ideas through the General Manager, getting involved, as well as not necessarily agreeing with the other Board Members on every topic in order to bring additional ideas to the table.

Director Gasca reported CSDA has grown a great deal since he served on a previous Board. He stated the product CSDA delivers to districts is tremendous. He mentioned the law that has been added to support the Brown Act was beneficial. He pointed out he had an opportunity to speak extensively with the CEO and other staff members of CSDA.

Director Stewart reported there was quite a bit of time spent talking about fiduciary matters he found very interesting. He stated although RMWD has financial professionals at the District, the Board still has a duty to be very cognizant in how public funds are utilized including long term planning. He added one thing that stood out to him most was the importance of having active communication program to and with the ratepayers. He commended the RMWD committees for their dedication in attending meetings, operating under the Brown Act, and looking at everything which in turns make the job of the Board much easier. He congratulated the General Manager and staff for moving RMWD in the right direction.

D. Directors Comments

There were no comments.

E. Legal Counsel Comments

1. Proposition 218 (501668-0002)

Legal Counsel summarized the report provided in the agenda packet.

***14. COMMITTEE REPORTS (Approved Minutes have been attached for reference only.)**

A. Budget and Finance Committee

1. June 13, 2017 Minutes

Mr. Stitle reported the committee approved the budget. He provided an overview of the budget suggesting RMWD watch its employee headcount as well as look at adjusting employee benefits in the next 2-3 years. Discussion ensued regarding reserves.

B. Communications Committee

1. June 5, 2017 Minutes

Mrs. Gray reported the committee was given a presentation by a local vendor on senior healthcare and wellness services in order to get an idea of what types of services may be available to RMWD's customers. Discussion followed.

C. Engineering Services Committee

1. June 7, 2017 Minutes

Mrs. Kirkpatrick stated there was discussion regarding emergency storage projects, reviewed and recommended the capacity fee changes as provided under Item #16 of this agenda, and sewer overflow remedies.

BOARD ACTION ITEMS

***15. DISCUSSION AND POSSIBLE ACTION TO APPROVE A VARIANCE FROM THE DISTRICT'S ADMINISTRATIVE CODE AND ALLOW THE SMITH FAMILY TRUST TO TRANSFER AND RELOCATE METER FROM PARCEL 108-291-43 TO PARCEL 108-291-28**

Mrs. Kirkpatrick referenced Page 51 of the Board packet noting a customer on Yucca Road was requesting a meter that sits on Lot 43 to where it actually serves which is Lot 28. She explained the request was to approve a variance to the Administrative Code policy to accommodate this transfer. She pointed out the Engineering Services Committee did discuss this matter and recommends Board approval as long as documentation is provided from the abutted parcels about this work. She mentioned the District has not received anything from Parcel 42 as of yet; therefore, the Board's option would be to grant a variance contingent upon receiving this final documentation. Discussion ensued.

It was decided to have this item brought back to the Board once the documentation is received.

No action taken.

***16. DISCUSSION AND POSSIBLE ACTION TO ADOPT ORDINANCE NO. 17-07 REVISING APPENDIX A OF THE RULES AND REGULATIONS REGARDING WATER AND SEWER CAPACITY CHARGES AND ORDINANCE NO.17-08 AMENDING AND UPDATING ADMINISTRATIVE CODE SECTION 9.02-DEFINITIONS AND 9.07-EQUIVALENT DWELLING UNITS ESTABLISHED**

Mr. Kennedy explained the benefits of having capacity fees associated with meter sizes which in turn may alter the impact on the facilities and system as well as assist the customers by getting charges and fees set appropriately.

Mrs. Kirkpatrick noted the most important changes made were within Appendix A. She also referenced Page 79 pointing out a $5.00 Fire Service Charge will now be assessed. She pointed out the new capacity classes and charges are listed on Page 79 and how the unconnected charge for sewer has been eliminated and instead of going by number of bedrooms, the charges will be based on square footage.

She noted this item is to approve an ordinance noting the changes to both water and sewer capacity fees.

Motion:

Approve Ordinance No. 17-07.

Action: Approve, Moved by Director Gasca, Seconded by Director Stewart.

Vote: Motion carried by unanimous roll call vote (summary: Ayes = 4).

Ayes: Director Brazier, Director Mack, Director Stewart, Director Gasca.

Motion:

Approve Ordinance No. 17-08.

Action: Approve, Moved by Director Stewart, Seconded by Director Gasca.

Vote: Motion carried by unanimous roll call vote (summary: Ayes = 4).

Ayes: Director Brazier, Director Mack, Director Stewart, Director Gasca.

***17. DISCUSSION AND POSSIBLE ACTION TO AWARD A CONTRACT FOR WATER AND WASTEWATER RATE SETTING SERVICES**

Mr. Kennedy talked about the Cost of Service Study. He noted part of this study was to be able to address the concerns of the ratepayers and high fixed fees. He noted this item was for Board approval of the change orders required to complete these services since the amounts are more than his approval level.

Motion:

Approval of Staff Recommendation – the approval of the initiation of the water and wastewater rate setting process and the contract with Raftelis Financial Consultants.

Action: Approve, Moved by Director Gasca, Seconded by Director Mack.

(*) - Asterisk indicates a report is attached.

Vote: Motion carried by unanimous vote (summary: Ayes = 4).

Ayes: Director Brazier, Director Mack, Director Stewart, Director Gasca.

***18. DISCUSSION REGARDING ADMINISTRATIVE CODE CHAPTER 2.03 – REMUNERATION AND REIMBURSEMENT**

Mr. Kennedy referenced the memorandum provided to the Board related to the results of the survey conducted with other agencies.

President Brazier suggested prior to discussing the number of meetings, it would be important to address budgetary impacts.

Mr. Kennedy summarized each of the variances provided in the memorandum. President Brazier recommended addressing the Board's financial responsibility and how it will impact costs by sending all the Directors to every conference. Director Gasca suggested Mr. Kennedy review each of the topics after which the Directors could give their input.

President Brazier recommended exercising a responsibility by finding conferences that would not cost as much as others. She mentioned receiving a phone call from a member of the public regarding the picture of four RMWD Directors attending a conference published in the District newsletter and their inquiry regarding approval for attendance. Mr. Kennedy replied it was discussed informally; however, he has already implemented a change by adding a standing item on each regular meeting agenda to allow for Board consideration and action when it comes to attendance at workshops and conferences. President Brazier agreed this would allow for transparency.

President Brazier stated with RMWD barely breaking even and with the possibility of considering passing rate increases on to the customers, she would recommend this matter be brought to the Budget and Finance Committee for their input and a recommendation to the Board. Mr. Kennedy explained this was a policy matter and the expenses were already included in the budget; therefore, each time this matter is considered during a regular Board meeting, an informed decision can be made based on the budget and costs involved.

Director Gasca inquired as to which Directors serve on each of the three committees. He noted his interest in serving on the Budget and Finance Committee. It was suggested he attend one of the committee meetings and informing the committee of his interest so that the committee could make a recommendation to the Board that he be appointed as a member.

Director Mack stated as a new member to the Board, he was very fortunate to be able to attend these conferences and how they are beneficial training opportunities. Discussion ensued regarding frequency and monetary costs based on where these events are held. Mr. Kennedy pointed out the budgeted amount for Board Member conferences and training is $25,000 which does not include per diems.

Director Gasca agreed with President Brazier regarding using a methodical procedure in trying to find the best mix in conferences to support RMWD within the budgeted amounts. Discussion ensued regarding establishing an ad hoc committee or holding a Board workshop to discuss this further and provide a recommendation to the Board for consideration.

Discussion continued regarding what scenarios and details should be considered during the policy review process.

Motion:

To hold a Board workshop to discuss this matter in greater detail.

Action: Approve, Moved by Director Gasca, None seconded.

Motion failed for lack of a second.

Director Gasca amended his original motion.

Motion:

To have an ad-hoc committee of the Board with members to be appointed by the President to prepare a draft plan for Board activity that remains within the $25,000 budget to be presented at a Board workshop.

Action: Approve, Moved by Director Gasca, Seconded by Director Stewart.

Vote: Motion passed (summary: Ayes = 3, Noes = 1, Abstain = 0).

Ayes: Director Brazier, Director Stewart, Director Gasca.

Noes: Director Mack.

President Brazier confirmed she and Director Gasca will serve on the ad hoc committee and that Mr. Kennedy would participate in the ad hoc committee meetings.

Director Stewart recommended a summary of average costs associated with attending conferences and training events. Mr. Kennedy solicited the Board Members for input in terms of they would like the ad hoc committee to consider. Director Stewart pointed out the amount of time involved in reviewing this topic was valuable in that it will assist in determining the cost associated with serving on the RWMD Board of Directors, especially when individuals are considering running for the Board. President Brazier pointed out there should also be a public value service to the role as well. Director Stewart agreed.

Director Gasca recommended this process be utilized to gauge where RMWD ranks compared to other water agencies. Discussion ensued. Mr. Kennedy stated this may be something to make part of the strategic planning goals and objectives.

Director Stewart recommended this matter be addressed expediently.

19. DISCUSSION AND POSSIBLE ACTION TO APPOINT ROBERT MARNETT AS A MEMBER AND LEE KIRBY AS AN ALTERNATE MEMBER TO THE ENGINEERING SERVICES COMMITTEE

Mr. Kennedy explained Mr. Kirby has notified the District that due to his work schedule, his attendance at meetings are less frequent. It was confirmed the change in membership was mutually agreeable to both parties.

Motion:

Approve staff recommendation - the Board appoint Robert Marnett as a member and Lee Kirby as an alternate member to Engineering Services Committee.

Action: Approve, Moved by Director Stewart, Seconded by Director Gasca.

Vote: Motion carried by unanimous vote (summary: Ayes = 4).

Ayes: Director Brazier, Director Mack, Director Stewart, Director Gasca.

***20. ACWA CALL FOR CANDIDATES NOMINATIONS FOR THE 2018-2019 TERM**

Mr. Kennedy pointed out ACWA was seeking candidates for top positions on their Board; therefore, he was putting this before the Board in the event they wanted to make a nomination. He confirmed the nominees had to be an elected or appointed member of a governing body.

No action taken.

21. AUTHORIZATION TO ATTEND UPCOMING MEETINGS / CONFERENCES / SEMINARS

Mr. Kennedy noted the 2017 CSDA Annual Conference scheduled for September 25-27, 2017 in Monterey will be addressed at the August 22, 2017 Board meeting. It was pointed out the conference would be held when the RMWD Board meeting is scheduled in September 2017.

***22. RECEIVE AND FILE INFORMATION AND FINANCIAL ITEMS FOR MAY/JUNE/JULY 2017**

A. **General Manager Comments**
   1. Meetings, Conferences and Seminar Calendar
B. **Operations Comments**
   1. Operations Report
C. **Engineering Comments**
   1. Engineering Report
D. **Customer Service Comments**
   1. Customer Service Report
E. **Human Resource & Safety Comments**
   1. Human Resources Report
   2. Organizational Chart
F. **Finance Manager Comments**
   1. Interim Financial Statement
   2. Credit Card Breakdown
   3. Directors' Expense
   4. Check Register
   5. Water Sales Summary
   6. RMWD Sewer Equivalent Dwelling Units (EDU's) Status

Motion:

Receive and file information and financial items.

Action: Approve, Moved by Director Hamilton, Seconded by Director Mack.

(*) - Asterisk indicates a report is attached.

Vote: Motion carried by unanimous vote (summary: Ayes = 4).

Ayes: Director Brazier, Director Mack, Director Stewart, Director Gasca.

23. LIST OF SUGGESTED AGENDA ITEMS FOR THE NEXT REGULAR BOARD MEETING

It was noted the ad hoc committee report/update as well as the General Manager evaluation and contract need to be on the next agenda.

24. ADJOURNMENT - To Tuesday, August 22, 2017 at 1:00 p.m.

The meeting was adjourned with a motion made by Director Brazier to a regular meeting on August 22, 2017.

The meeting was adjourned at 4:17 p.m.

Helene Brazier, Board President

Dawn M. Washburn, Board Secretary

(*) - Asterisk indicates a report is attached.

San Diego County Water Authority

SUMMARY OF FORMAL BOARD OF DIRECTORS' MEETING
JULY 27, 2017

9-1. Professional services contract with PICA Pipeline Inspection and Condition Analysis Corp. (USA) for condition assessment of welded steel liners and welded steel pipe on Pipeline 3 from Spring Valley to Proctor Valley.
The Board authorized the General Manager to award a professional services contract to PICA Pipeline Inspection and Condition Analysis Corp. (USA) for the condition assessment of approximately 4.9 miles of welded steel liners and 1,580 feet of welded steel pipe on Pipeline 3 from Spring Valley to Proctor Valley, for a total not-to-exceed amount of $664,629.

9-2. Construction contract with L.H. Woods & Sons, Inc. and Agreement with San Diego Gas & Electric for the Pipeline 3 Relining Lake Murray to Sweetwater Reservoir project.
The Board authorized the General Manager to award a construction contract to L.H. Woods & Sons, Inc. in the amount of $28,570,000 for the Pipeline 3 Relining Lake Murray to Sweetwater Reservoir project and authorized the General Manager to execute an Agreement between San Diego Gas & Electric and the San Diego County Water Authority, in the amount of $481,467, to reimburse SDG&E for its costs to remove and replace a 16-inch high-pressure gas main utility conflict.

9- 3. Monthly Treasurer's Report on Investments and Cash Flow.
The Board noted and filed monthly Treasurer's Report.

9- 4. Authorize General Manager to Augment Underwriting Firms to Water Authority's Prequalified Underwriting Pool.
The Board authorized the General Manager to Augment Underwriting Firms to the Pre-qualified Underwriting Pool.

9- 5. Ordinance amending Chapter 2.00 and Chapter 2.05 of the Administrative Code.
The Board adopted Ordinance No. 2017-04, an ordinance of the board of directors of the San Diego County Water Authority amending Chapter 2.00 and Chapter 2.05 of the Administrative Code.

9- 6. Adopt positions on various state bills.
The Board adopted a position of Support on AB 1361 (Garcia), relating to water service for Indian tribal lands.

9- 7. Amendment to the Water Authority Annexation Policies.
The Board amended Water Authority Annexation Policy #4, entitled "Annexation Fee," and amended Policy #12, entitled "Administrative Costs," to address approved revisions to the annexation fee structure.

NOSSAMAN LLP | Memorandum

TO: Rainbow Municipal Water District

FROM: Alfred Smith

DATE: August 22, 2017

RE: Attorney Report: Employment Law Update
501668-0002

I. INTRODUCTION.

On Tuesday, June 27, 2017, Governor Brown signed Assembly Bill 119 into law. The new law requires public employers to provide union representatives access to new employees during their orientations. The bill applies to both recognized public employee unions and employee associations.

AB 119 defines employee orientation as the "onboarding process" -- whether in person, online or through other means, during which new employees are advised of their employment status, rights, benefits, duties and responsibilities, or any other employment-related matters.

In addition, public employers must now provide union representatives with not less than 10 days' notice in advance of a new employee orientation, except that a shorter notice may be provided in a specific instance where there is an urgent need critical to the employer's operations that was not reasonably foreseeable.

II. AB 119.

The law applies to public agencies including cities, counties, special districts, trial courts, state civil service agencies, the Los Angeles County Metropolitan Transportation Authority, public schools (K-12), community colleges, California State Universities, Universities of California and school districts. [1]

[1] AB 119 applies to public employers, including special districts, regulated by the following laws: the Meyers-Milias-Brown Act, the Ralph C. Dills Act, the Trial Court Employment Protection and Governance Act, the Trial Court Interpreter Employment and Labor Relations Act, the Los Angeles County Metropolitan Transportation Authority Transit Employer-Employee Relations Act, the Educational Employment Relations Act, the Higher Education Employer-Employee Relations Act, and the Public Employment Relations Board.

AB 119 adds Section 3555 to 3559 to the California Government Code to amend the labor relations statute to the jurisdictions listed above. Additionally, it amends Sections 6253.2 and 6254.3 of the California Public Records Act.

The law requires that: (1) an exclusive representative (e.g., recognized public employee unions, employee associations) be provided the right to access new employee orientations and to compel collective bargaining processes related to the structure, time and manner of such orientation access; and (2) exempts public employees' personal email addresses from disclosure under the California Public Records Act.

The law went into effect immediately upon the Governor's signature.

III. REPRESENTATIVE ACCESS TO EMPLOYEE ORIENTATION.

AB 119 states:

> "The ability of an exclusive representative to communicate with the public employees it represents is necessary to ensure the effectiveness of state labor relations statutes, and the exclusive representative cannot properly discharge its legal obligations unless it is able to meaningfully communicate through cost-effective and efficient means with the public employees on whose behalf it acts. In most cases, that communication includes an opportunity to discuss the rights and obligations created by the contract and the role of the representative, and to answer questions."

The law requires each public employer to provide the exclusive representative mandatory access to the new employee orientations of the employees it represents.

III. THE ORIENTATION AND NOTICE.

"New employee orientation" means the onboarding process of a newly hired public employee in which employees are advised of their employment status, rights, benefits, duties and responsibilities, and any other employment related matters. It does not matter which medium the orientation takes place in, whether it is in person, online, or through other mediums.

AB 119 defines who is considered a "newly hired public employee." The definition includes any new employee regardless of whether they are being hired to a permanent, temporary, full time, part time, or seasonal position. However, the right to access new employee orientations is limited to bargaining unit employees represented by that exclusive representative only.

AB 119 provides that the public employer needs to provide the exclusive representative with information about the newly hired public employees before the

orientation. Within 30 days of hiring the employee, the employer must provide the representative with the name, job title, department, work location, work, home, and personal cellular telephone numbers, personal email addresses on file with the employer, and the home address of the new hire. The employer must also provide the representative with a list of all that information for all employees in the bargaining unit at least every 120 days unless more frequent or more detailed lists are required by an agreement with the exclusive representative.

Employers are also required to provide the exclusive representative with at least 10 days' notice of the orientation. Employers do not have to give 10 days' notice of an orientation if there is an urgent need that is critical to the employer's operations that was not reasonably foreseeable. The legislation states that the purpose of this notice period is to give the employer and representative an opportunity to negotiate over the details of the new employee orientation.

AB 119 further requires that the public employer and the exclusive representative negotiate over the "*structure, time, and manner*" of the access of the exclusive representative to a new employee orientation. Generally speaking, this would encompass the following issues:

- At what time during the employee orientation an exclusive representative will be provided access to new employees (beginning, middle, end, etc.);
- How much time the exclusive representative is provided to meet with the new employees;
- The content of what the exclusive representative will discuss with new employees;
- Whether new employees are required to attend the part of the orientation with the exclusive representative; and
- How to address exclusive representative access where new employee orientations include employees from multiple bargaining units.

If the public employer and the exclusive representative cannot come to an agreement about the structure, time, and manner of access to the new employee orientation, then either party can make a demand to participate in binding interest arbitration.

Binding interest arbitration under AB 119 provides that the dispute be submitted to a third-party arbitrator who is then authorized "to approve either party's proposal in its entirety, to approve a proposal using both the employer's and exclusive representative's final proposals, or to modify the proposals by the parties." The decision of the arbitrator is binding. The parties will equally share all costs of arbitration.

IV. PERSONAL EMAIL ADDRESSES.

AB 119 requires public employers to now provide the exclusive representative with the name, job title, department, work location, work and home address, personal cellular telephone number and personal email address on file with the employer of newly hired employees within 30 days of hire or by the first pay period of the month following hire. Additionally, public employers must provide this information to the exclusive representative for all employees in the bargaining unit at least once every 120 days, unless the parties can agree to different time frames.

The requirement for personal cell phone numbers and emails creates a tension between the purpose of the Public Records Act and the constitutional right to privacy. A fundamental principle of the Public Records Act is that governmental records shall be disclosed to the public, upon request, unless there is a specific reason not to do so. Even though the law strongly emphasizes the need for the public to have access to governmental records, the law still recognizes that an individual's privacy is of utmost importance. Where personal or intimate information is extracted from a person employed by the government, a privacy interest in such information is generally recognized.

The Public Records Act already allows agencies to withhold the home addresses, home telephone numbers, personal cellular telephone numbers, and birthdates of all employees of a public agency. This information is not considered to be public records. The new law now adds employees' personal email addresses to the list of information that may be withheld by the employer unless the employee uses the email address to conduct public business, or necessary to identify an otherwise disclosable communication.

Given that the California Supreme Court, in *City of San Jose v. Superior Court,* recently held that communications by a public employee concerning public business on a personal account, such as email, is subject to disclosure under the California Public Records Acts, AB 119 underscores the importance for public agencies to develop proper policies and procedures regarding the use of personal devices by employees and officials to conduct public business. In addition to developing strong policies, it is recommended that agencies provide training to their employees on these policies and document the training.

AES/AES

MINUTES OF THE BUDGET AND FINANCE COMMITTEE MEETING OF THE RAINBOW MUNICIPAL WATER DISTRICT MAY 9, 2017

1. CALL TO ORDER: The Budget & Finance Committee meeting of the Rainbow Municipal Water District was called to order by Chairperson Stitle on May 9, 2017 in the Board Room of the District Office at 3707 Old Highway 395, Fallbrook, CA 92028 at 1:00 p.m. Chairperson Stitle presiding.

2. PLEDGE OF ALLEGIANCE

3. ROLL CALL:

Present: Member Stitle, Member Hensley, Member Clyde, Member Moss, Alternate Martinez.

Also Present: General Manager Kennedy, Executive Assistant Washburn, Associate Engineer Powers, Accounting Specialist Rubio, Directors Gasca and Brazier.

Absent: Member Ross.

There were no public members present.

4. SEATING OF ALTERNATES

Alternate Martinez was seated to participate in Member Ross' absence.

5. ADDITIONS/DELETIONS/AMENDMENTS TO THE AGENDA (Government Code §54954.2)

There were no changes.

6. PUBLIC COMMENT RELATING TO ITEMS NOT ON THE AGENDA (Limit 3 Minutes)

There were no comments.

COMMITTEE ACTION ITEMS

7. COMMITTEE MEMBER COMMENTS

Mr. Stitle asked for an update on the Gopher Canyon water break. Mr. Kennedy explained a hydrant lateral let go early in the morning earlier this week where two cars had crashed. He noted RMWD had the water under control with thirty minutes with the road closed with traffic control for approximately five yours to allow SDG&E to ccme check on wires.

***8. APPROVAL OF MINUTES**

A. April 11, 2017

Mr. Stitle noted on Page 3, second paragraph should be "pre-fund" as opposed "pre-fun".

Motion:

To approve the minutes as corrected.

Action: Approve, Moved by Member Clyde, Seconded by Member Hensley.

Vote: Motion carried by unanimous vote (summary: Ayes = 5).

Ayes: Member Stitle, Member Hensley, Member Clyde, Member Moss, Alternate Martinez.

9. DISCUSSION AND POSSIBLE ACTION TO APPROVE AUDIT

Mrs. Martinez gave a presentation as she reviewed the final draft of the FY2016 audit which was provided as a handout to the committee members. She pointed out RMWD's audit met the unqualified clean statement of opinion, which is the desired result.

Discussion ensued.

Motion:

To recommend the Board approve the audit.

Action: Approve, Moved by Member Hensley, Seconded by Member Clyde.

Vote: Motion carried by unanimous vote (summary: Ayes = 5).

Ayes: Member Stitle, Member Hensley, Member Clyde, Member Moss, Alternate Martinez.

10. DISCUSSION AND POSSIBLE ACTION REGARDING DRAFT BUDGET FOR FISCAL YEAR 2017-2018

Mr. Kennedy pointed out there will be a joint meeting with the Board and the Budget and Finance Committee meeting on May 23, 2017 at which he will not be present.

Mrs. Martinez gave a presentation on a rough draft of the Fiscal Year 2017-2018 budget to review a few objectives and critical success factors. Mr. Kennedy pointed out one of the things different this year than in the past is having the objectives lined up including how to meet those objectives; therefore, the will be more emphasis on achieving the strategic goals and objectives and how it may or may not impact the budget.

Discussion ensued regarding the staff analysis.

Mr. Clyde asked for an update on the Avocado Festival. Mr. Kennedy talked about the materials and videos RMWD displayed as well as how there was a great deal of community contact made.

Mrs. Martinez pointed out Human Resources has been moved to its own Cost Center from the Administration Cost Center. She noted Human Resources has budgeted a temporary employee for $50,000. Mr. Kennedy pointed out there was a Human Resources Technician position last year which was eliminated; however, since Mrs. Harp has been working diligently to get this department caught up, there was a need for temporary help. He there was no anticipation in terms of having a need for a second full time person; however, there may be an ongoing need to have additional support.

Mrs. Martinez talked about the detailed list provided on vehicles. She noted staff deferred two vehicles after reviewing RMWD's operational needs. Discussion followed.

Discussion ensued regarding the Capital Improvement projects.

Mrs. Martinez reviewed the water demand projections as well as revenue adjustments. She mentioned there was consideration being given to increasing the RMWD pass through costs. Mr. Kennedy pointed out if RMWD does not start gradually increasing rates now, the District will more than likely find itself in a bad situation in a few years.

Mr. Stitle requested the information provided at this meeting be forwarded to the committee members prior to the May 23rd joint meeting with the Board.

Mrs. Martinez mentioned some of the number are not concrete and how there may be some labor cost changes once the employee contract negotiations are finalized.

11. DISCUSSION AND POSSIBLE ACTION REGARDING CAPACITY FEES

Mr. Kennedy stated this information was discussed with the Engineering Committee. He noted the system engineering utilizes may subject RMWD to some challenges; therefore, there were some acute changes made by the consultant which he provided additional detail.

Mr. Kennedy continued to review all the information provided in the handout. He concluded by pointing out both the water and wastewater capacity fees as well as any relative components. He explained the steps to follow leading up to the Board's final consideration for adopting the proposed capacity fees at their June 27th meeting.

Motion:

To suggest the Board release the Capacity Fee Study for public comment.

Action: Approve, Moved by Member Hensley, Seconded by Member Clyde.

Vote: Motion carried by unanimous vote (summary: Ayes = 5).

Ayes: Member Stitle, Member Hensley, Member Clyde, Member Moss, Alternate Martinez.

12. DISCUSSION REGARDING BILLING FORMAT REDESIGN

Mr. Kennedy stated this item would need to be deferred until next month at which time the consultant will give a presentation. He explained some of the services the new consultant can provide.

13. DEVELOPER UPDATE

Mr. Powers mentioned not much has changed in the developer projections. He noted Horse Ridge Creek anticipates having models by July 2017.

Mr. Kennedy inquired about the 276 5/8" meters being installed in 2019. Mr. Powers explained these were for condominium projects being developed in Bonsall. He noted this was based on information provided at meetings and how projects more than often get pushed back.

Discussion ensued regarding development in Bonsall.

Mr. Kennedy talked about the information provided in the handout. He noted there was a reduction in the sewer projections and a modest increase in water. Mr. Powers mentioned the Pala Mesa Highlands just finished putting in the line last week and Golf Green Estates was well on their way in putting in the wet utilities. Discussion followed.

Ms. Moss stated it has been stated closing of any acquisitions will not take place for at least another year past the originally anticipated dates. Mr. Kennedy suggested RMWD engineering staff move projects over by twelve months, it will assist RMWD in remaining conservative in budget projections. He suggested implementing some type of waiting time on some projects to assist with the budget forecasting process as a means of eliminating surprises when changes in projections takes place.

Ms. Moss explained how looking at the tract numbers will assist with properly forecasting the development projections more accurately. Discussion followed.

Mr. Kennedy requested Engineering push some of the developments out would assist in providing more accurate information in the rate model going forward.

14. DISCUSSION REGARDING CALPERS PENSION LIABILITY

Mr. Kennedy noted certain aspects of this matter pertains to labor negotiations; therefore, he would not be able to discuss this matter in too much detail. He pointed out the unfunded liability has decreased.

Discussion ensued regarding how CalPers may be impacted when employees draw from Social Security.

Mr. Kennedy explained how through labor negotiations attempts were being made to manage post-employment benefits in the current fiscal years as opposed to leaving them until employees retire. He noted this was a property right given to employees over several Memorandum of Understandings for years; therefore, it could not be just stripped away but rather phased out through a transitioning process.

15. REVIEW THE FOLLOWING:

A. Income Statement
B. Balance Sheet
C. Cash Flow

Mrs. Martinez referred to the handouts provided to the committee members.

Discussion ensued regarding the current water sales including projected forecasts.

Mrs. Martinez talked about funding and reserves.

Mr. Kennedy announced RMWD was giving Springbrook one more attempt at meeting RMWD's needs including reporting systems; however, it remains unclear if this will ever happen which may in turn lead to researching other options.

16. LIST OF SUGGESTED AGENDA ITEMS FOR THE NEXT SCHEDULED BUDGET AND FINANCE COMMITTEE MEETING

It was a presentation by InfoSend, Inc., the Capacity Fee Study, budget updates, and rate increases should be on the next agenda.

17. ADJOURNMENT

The meeting was adjourned with a motion made by Member Hensley.

The meeting adjourned at 3:26 p.m.

Harry Stitle, Committee Chairperson

Dawn M. Washburn, Board Secretary

MINUTES OF THE BUDGET AND FINANCE COMMITTEE MEETING OF THE RAINBOW MUNICIPAL WATER DISTRICT JULY 11, 2017

1. **CALL TO ORDER**: The Budget & Finance Committee meeting of the Rainbow Municipal Water District was called to order by Chairperson Stitle on July 11, 2017 in the Board Room of the District Office at 3707 Old Highway 395, Fallbrook, CA 92028 at 1:00 p.m. Chairperson Stitle presiding.

2. **PLEDGE OF ALLEGIANCE**

3. **ROLL CALL:**

Present: Member Stitle, Member Ross, Member Moss.

Also Present: Executive Assistant Washburn, Engineering Manager Kirkpatrick, Accounting Specialist Rubio.

Absent: Member Hensley, Alternate Martinez.

One member of the public was present.

4. **SEATING OF ALTERNATES**

There was no seating of alternates.

5. **ADDITIONS/DELETIONS/AMENDMENTS TO THE AGENDA (Government Code §54954.2)**

There were no changes to the agenda.

6. **PUBLIC COMMENT RELATING TO ITEMS NOT ON THE AGENDA (Limit 3 Minutes)**

There were no public comments.

COMMITTEE ACTION ITEMS

7. **COMMITTEE MEMBER COMMENTS**

There were no committee comments.

*8. **APPROVAL OF MINUTES**
A. May 9, 2017
B. June 13, 2017

Motion:

Approve the minutes for both months as presented.

Action: Approve, Moved by Member Moss, Seconded by Member Ross.

Vote: Motion carried by unanimous vote (summary: Ayes = 3).

Ayes: Member Stitle, Member Ross, Member Moss.

9. DEVELOPMENT UPDATE

Mrs. Kirkpatrick provided an update on each of three of the active development projects currently in progress. She noted capacity fees would be going before the Board for consideration at the July Board meeting.

10. CAPITAL PROJECT UPDATE

Mrs. Kirkpatrick referenced the handouts she provided as she gave a summary of each of the 2017-2018 fiscal year water and wastewater capital improvement projects.

11. DISCUSSION REGARDING LABOR NEGOTIATIONS

Ms. Rubio referenced the handout provided at the meeting highlighting the significant changes to the Memoranda of Understanding resulting from the 2017 labor negotiations noting both positive and negative fiscal impacts. Discussion ensued regarding some of the items reviewed.

Mr. Ross requested an overall aggregated fiscal impact report for budget purposes for each year of the contract.

Discussion ensued regarding the compensation and salary study comparisons made with both public and private sectors.

Mr. Stitle suggested the Budget and Finance Committee be included as part of the approval process during the next round of negotiations. Mr. Ross stated maybe not the approval process, but possibly during the analysis. Mrs. Harp explained all discussion related to labor negotiations take place in closed sessions. Mr. Stitle reiterated it was his opinion that prior to the Board's approval of labor contracts, the committee be permitted to review the data in a closed session to provide budgetary guidance and input. He asked that this be placed on the next agenda for discussion with Mr. Kennedy present.

12. DISCUSSION REGARDING ADMINISTRIAVE CODE UPDATES

Ms. Rubio pointed out the proposed changed to Administrative Code Section 8.12.202.6 – Delinquent Account Fees. There were no objections to the proposed change presented by the Budget and Finance Committee members.

13. REVIEW THE FOLLOWING:

A. Income Statement
B. Balance Sheet
C. Cash Flow

This item was not discussed.

14. LIST OF SUGGESTED AGENDA ITEMS FOR THE NEXT SCHEDULED BUDGET AND FINANCE COMMITTEE MEETING

It was noted a San Luis Rey residents update as well as a discussion item for labor negotiations should be on the next agenda.

15. ADJOURNMENT

The meeting was adjourned with a motion made by Member Moss and seconded by Member Ross.

The meeting adjourned at 2:00 p.m.

Harry Stitle, Committee Chairperson

Dawn M. Washburn, Board Secretary

MINUTES OF THE COMMUNICATIONS COMMITTEE MEETING OF THE RAINBOW MUNICIPAL WATER DISTRICT JULY 10, 2017

1. **CALL TO ORDER –** The Communications Committee Meeting of the Rainbow Municipal Water District on July 10, 2017 was called to order by Chairperson Daily at 3:42 p.m. in the Board Room of the District, 3707 Old Highway 395, Fallbrook, CA 92028. Chairperson Daily, presiding.

2. **PLEDGE OF ALLEGIANCE**

3. **ROLL CALL:**

Present: Member Daily, Member Hamilton, Member Kurnik *(arrived at 3:56 p.m.)*, Alternate Gray.

Also Present: Executive Assistant Washburn, Human Resources Manager Harp.

Absent: Member Kirby.

One member of the public was present.

4. **SEATING OF ALTERNATES**

Mr. Daily noted Mrs. Gray will be seated to participated in this meeting.

5. **ADDITIONS/DELETIONS/AMENDMENTS TO THE AGENDA (Government Code §54954.2)**

There were no changes to the agenda.

6. **PUBLIC COMMENT RELATING TO ITEMS NOT ON THE AGENDA**

There were no comments.

COMMITTEE ACTION ITEMS

*7. **APPROVAL OF MINUTES**
A. June 5, 2017

Ms. Gray pointed out there was an extra period in the fourth paragraph of Item #11.

Motion:

Approve the minutes as revised.

Action: Approve, Moved by Member Hamilton, Seconded by Alternate Gray.

Vote: Motion carried by unanimous roll call vote (summary: Ayes = 3).

Ayes: Member Daily, Member Hamilton, Alternate Gray.

Discussion went to Item #9.

8. PRESENTATION REGARDING LOCAL SENIOR SERVICES

Judi Bonilla, Aging Expert and Author for Advocate for Aging, joined the meeting via teleconference. A presentation was given on "Aging in Place" and what types of services and training are available for local seniors within the Fallbrook community.

Discussion ensued regarding the sort of training that may be helpful for the RMWD customer service representatives.

It was noted the information Ms. Bonilla provided was valuable to help RMWD's senior community.

Ms. Gray stated the committee would continue to get with Mrs. Martinez to discuss the bill formatting as a means of assisting the senior ratepayers.

Discussion went to Item #11.

9. DISCUSSION REGARDING NAMING OF FACILITIES

Ms. Brazier mentioned the only facility name that was unfavorable at the Engineering Committee meeting was the one suggestion to use "Little Gopher Canyon". Mrs. Gray noted the other suggestion for this same facility was "Old River".

Mr. Hamilton asked whether the naming of the facilities was for the benefit of the public or internal use. It was noted this was something that needed to be determined to decide whether signage was necessary at the facilities.

Discussion went to Item #10.

10. DISCUSSION REGARDING NEW BILLING NOTIFICATIONS AND MARKETING

Mrs. Gray solicited the committee members for their input in terms of messaging.

Mr. Hamilton mentioned it would be beneficial for the public to be able to access their usage in terms of time of day so that they could make adjustments to use water during off peak hours. Discussion ensued regarding Smart Meters providing this capability in the future.

Member Kurnik joined the meeting at 3:56 p.m.

Mrs. Martinez pointed out there would be options to include targeting certain customer types if and when necessary.

Discussion returned to Item #8.

11. COMMUNICATIONS PLAN/TOPICS/STRATEGIC PLAN OBJECTIVES

Mrs. Gray mentioned the FAQ's are started, but need more fine tuning relative to RMWD's customer base. Mr. Daily offered his assistance with this project or any other strategic objectives.

Mrs. Gray encouraged the committee to review the handout presented and notify her with any recommendations and input.

Discussion went to Item #12.

12. REVIEW AND ANALYSIS OF RMWD RELATED MEDIA STORIES

Mr. Daily commented on three articles provided to the Committee.

Discussion went to Item #13.

13. COMMITTEE MEMBER COMMENTS

There were no comments.

Discussion went to Item #14.

14. LIST OF SUGGESTED AGENDA ITEMS FOR THE NEXT SCHEDULED COMMUNICATIONS COMMITTEE MEETING

It was noted the naming facilities communication efforts as well as new billing notifications and marketing should be on the next committee agenda.

15. ADJOURNMENT

The meeting was adjourned at 5:03 p.m.

Mike Daily, Committee Chairperson

Dawn M. Washburn, Board Secretary

MINUTES OF THE ENGINEERING SERVICES COMMITTEE MEETING OF THE RAINBOW MUNICIPAL WATER DISTRICT JULY 5, 2017

1. **CALL TO ORDER** – The Engineering Services Committee Meeting of the Rainbow Municipal Water District on July 5, 2017 was called to order by Chairperson Prince at 3:00 p.m. in the Board Room of the District, 3707 Old Highway 395, Fallbrook, CA 92028. Chairperson Prince, presiding.

2. **PLEDGE OF ALLEGIANCE**

3. **ROLL CALL:**

Present: **Member Prince, Member Stitle, Member Taufer, Member Brazier, Member Ratican, Member Robertson, Alternate Marnett.**

Also Present: **General Manager Kennedy, Engineering Manager Kirkpatrick, Eng. Tech. Rubio**

Absent: **Member Kirby**

There were no public members present.

4. **SEATING OF ALTERNATES**

Mr. Kennedy said due to work constraints, Mr. Kirby would like to step down from a regular member to an alternate member. He noted Mr. Marnett would take Mr. Kirby's place as a member, pending Board approval. Mr. Marnett was invited to take a voting seat.

5. **ADDITIONS/DELETIONS/AMENDMENTS TO THE AGENDA (Government Code §54954.2)**

Mrs. Kirkpatrick added Agenda Item 14, regarding a customer's meter relocation request.

6. **PUBLIC COMMENT RELATING TO ITEMS NOT ON THE AGENDA**

There were no public comments.

COMMITTEE ACTION ITEMS

*7. **APPROVAL OF MINUTES**
A. June 7, 2017

Motion: **Accept the minutes as written.**

Action: **Approve, Moved by Member Brazier, Seconded by Member Stitle.**

Vote: **Motion carried by unanimous roll call vote (summary: Ayes = 7).**

Ayes: **Member Prince, Member Stitle, Member Taufer, Member Brazier, Member Ratican, Member Robertson, Alternate Marnett.**

8. DISCUSSION AND POSSIBLY ACTION REGARDING SAN DIEGO COUNTY WATER AUTHORITY EMERGENCY PUMP STATION

Mr. Kennedy said as part of the embedded water fees regular rate customers, not TSAWR customers, have paid San Diego County Water Authority (CWA) to provide Emergency Storage. He mentioned discussing this topic during a CWA meeting. He said the CWA would handle the CEQA and design of the Pump Station and wanted the District to build it. He stated the cost of the distribution line would be approximately $300K. He mentioned bringing the agreement "Principles of Understanding" to the Board to develop an acceptable agreement. Discussion ensued.

9. DISCUSSION AND POSSIBLE ACTION REGARDING NAMING OF FACILITIES

Mrs. Kirkpatrick provided a list from the Communications Committee with proposed names for District facilities. She said these facilities either do not have names or the names were confusing.

Mr. Kennedy said the Communications Committee named the tanks and pump stations by the community where they were located. He pointed out for functionality purposes pump stations should be named where they are pumped to. Discussion ensued.

10. DISCUSSION AND POSSIBLE ACTION REGARDING CAPACITY FEE AND POLICY

Mrs. Kirkpatrick asked for a recommendation regarding the revised capacity fees. She pointed out changes to Section 9.05.010 regarding sewer terms and permits, in particular the uncertainty regarding the refunding or not refunding sewer capacity fees. She said the current policy states that sewer fees are non-refundable. Mr. Kennedy stated by not refunding the sewer capacity fees it becomes an administrative challenge to maintain and track these records for decades. Discussion ensued.

Motion: **Recommend District staff prepare a refundable sewer policy.**

Action: **Approve, Moved by Member Robertson, Seconded by Member Stitle.**

Vote: **Motion carried by unanimous roll call vote (summary: Ayes = 7).**

Ayes: **Member Prince, Member Stitle, Member Taufer, Member Brazier, Member Ratican, Member Robertson, Alternate Marnett.**

Mrs. Kirkpatrick noted the recommended policy changes were to remove language stating non-refundable and to limit the sewer permit term for two years.

Mr. Stitle asked about major developments that purchase large number of EDUs and decide to build only half, would the balance be refunded? Mr. Kennedy suggested no, since facilities have been installed to support the larger amount. He noted comments and suggestions would be added to the policy.

Mrs. Kirkpatrick went over Exhibit 1 of the proposed ordinance for water / sewer rates and charges. She discussed all the changes that are marked by three asterisks. She pointed out the smaller meters would be approved based on lot size qualifications.

Mr. Taufer recommended clarifying units of "water" on Page 6, Paragraph A, Sewer Charges.

Mr. Stitle recommended defining what was included under Country Club on Page 8, Paragraph C, EDU description and basis for Sewer Capacity Charges.

Motion: Recommend approval with revisions.

Action: Approve, Moved by Member Stitle, Seconded by Member Robertson.

Vote: Motion carried by unanimous roll call vote (summary: Ayes = 7).

Ayes: Member Prince, Member Stitle, Member Taufer, Member Brazier, Member Ratican, Member Robertson, Alternate Marnett.

11. DISCUSSION AND POSSIBLE ACTION REGARDING LITTLE GOPHER SANITARY STATION OVERFLOW

Mr. Kennedy said the District had a sewer blockage incident on Little Gopher Canyon, which caused damage to a customer's house. He said staff assessed the situation and would be increasing inspections and cleanings, include an additional cleanout, and have an advance contract in place for sewage cleaning. Discussion ensued.

Mr. Ratican suggested installing sewer backflows. Mr. Kennedy said he would reach out to customers with potential risk from sewer backups.

12. DISCUSSION AND POSSIBLE ACTION REGARDING REGULAR AND ALTERNATE MEMBERS

Mr. Kennedy said as he mentioned earlier, Mr. Kirby suggested to be moved as an alternate member. Mrs. Kirkpatrick pointed out there would have to be a recommendation to the Board to appoint Mr. Marnett as a member.

Motion: Recommend to the Board to appoint Mr. Marnett as a member.

Action: Approve, Moved by Member Robertson, Seconded by Member Brazier.

Vote: Motion carried by unanimous roll call vote (summary: Ayes = 7).

Ayes: Member Prince, Member Stitle, Member Taufer, Member Brazier, Member Ratican, Member Robertson, Alternate Marnett.

Added Agenda Item 13.

13. DISCUSSION AND POSSIBLE ACTION REGARDING A METER RELOCATION

Mrs. Kirkpatrick said a District customer, Mr. Smith was requesting to relocate his remote meter closer to the parcel it actually serves. She continued even though he owns the two parcels they are not abutting, and per District policy the parcels must be abutting. She read the current policy and provided a map where the parcels were located. Discussion ensued.

Motion: Recommend to approve the meter relocation with the condition a letter of approval is provided from both property owners and at no cost to the District.

Action: Approve, Moved by Member Stitle, Seconded by Member Robertson.

Vote: **Motion carried by unanimous roll call vote (summary: Ayes = 7).**

Ayes: **Member Prince, Member Stitle, Member Taufer, Member Brazier, Member Ratican, Member Robertson, Alternate Marnett.**

14. LIST OF SUGGESTED AGENDA ITEMS FOR THE NEXT SCHEDULED ENGINEERING SERVICES COMMITTEE MEETING

- AMI Update
- Capacity Fee Policy

15. ADJOURNMENT

The meeting adjourned at 4:50 p.m.

Timothy Prince, Committee Chairperson

Dawn M. Washburn, Board Secretary

RAINBOW MUNICIPAL WATER DISTRICT
Committed to Excellence

BOARD ACTION

BOARD OF DIRECTORS

August 22, 2017

SUBJECT

DISCUSSION AND POSSIBLE ACTION TO APPROVE A VARIANCE FROM THE DISTRICT'S ADMINISTRATIVE CODE AND ALLOW THE SMITH FAMILY TRUST TO TRANSFER AND RELOCATE METER FROM PARCEL 108-291-43 TO PARCEL 108-291-28

BACKGROUND

Raymond Smith, trustee of the Smith Family Trust requested to relocate and transfer a meter from parcel 108-291-43, which is currently vacant land to 108-291-28 with the address of 788 Yucca Road, which the meter is currently serving a house and a small grove. He is the owner of both parcels. Per the District's administrative code, meters shall not be relocated or transferred to other parcels of land within the District unless the parcels are abutting and owned by the same Owner. The parcels are not abutting and are approximately 180 feet away from each other. See attached map.

DESCRIPTION

The Engineering Services Committee reviewed the request and recommend to the Board to allow the relocation and transfer with documentation from the adjacent properties approving the relocation. This was brought to the Board at the July 28th Board Meeting. However, we were missing correspondence from one adjacent owner and the item was postponed. We received letters from both adjacent property owners with APN 108-291-27 and APN 108-291-42. See attached letters from adjacent property owners of APN 108-291-27 and APN 108-291-42. This satisfies the Engineering Services Committee's recommendation.

POLICY/STRATEGIC PLAN KEY FOCUS AREA

Section 8.11.03.06 Meter Relocation
Section 8.11.030.7 Transfer of Capacity Charges or Meters

BOARD OPTIONS/FISCAL IMPACTS

No fiscal impact. Relocation costs and inspection deposit to be paid for by the Owner.

1. Grant a variance from the District's Administrative Code and allow the relocation and meter transfer from parcel 108-291-43 to parcel 108-291-28 (788 Yucca Road).
2. Deny the request for variance and do not allow the relocation and meter transfer from parcel 108-291-43 to parcel 108-291-28, the customer must purchase a meter if they would like a service on 788 Yucca Road.

STAFF RECOMMENDATION

Staff supports Board direction.

Sherry Kirkpatrick 8/22/17
Engineering Manager

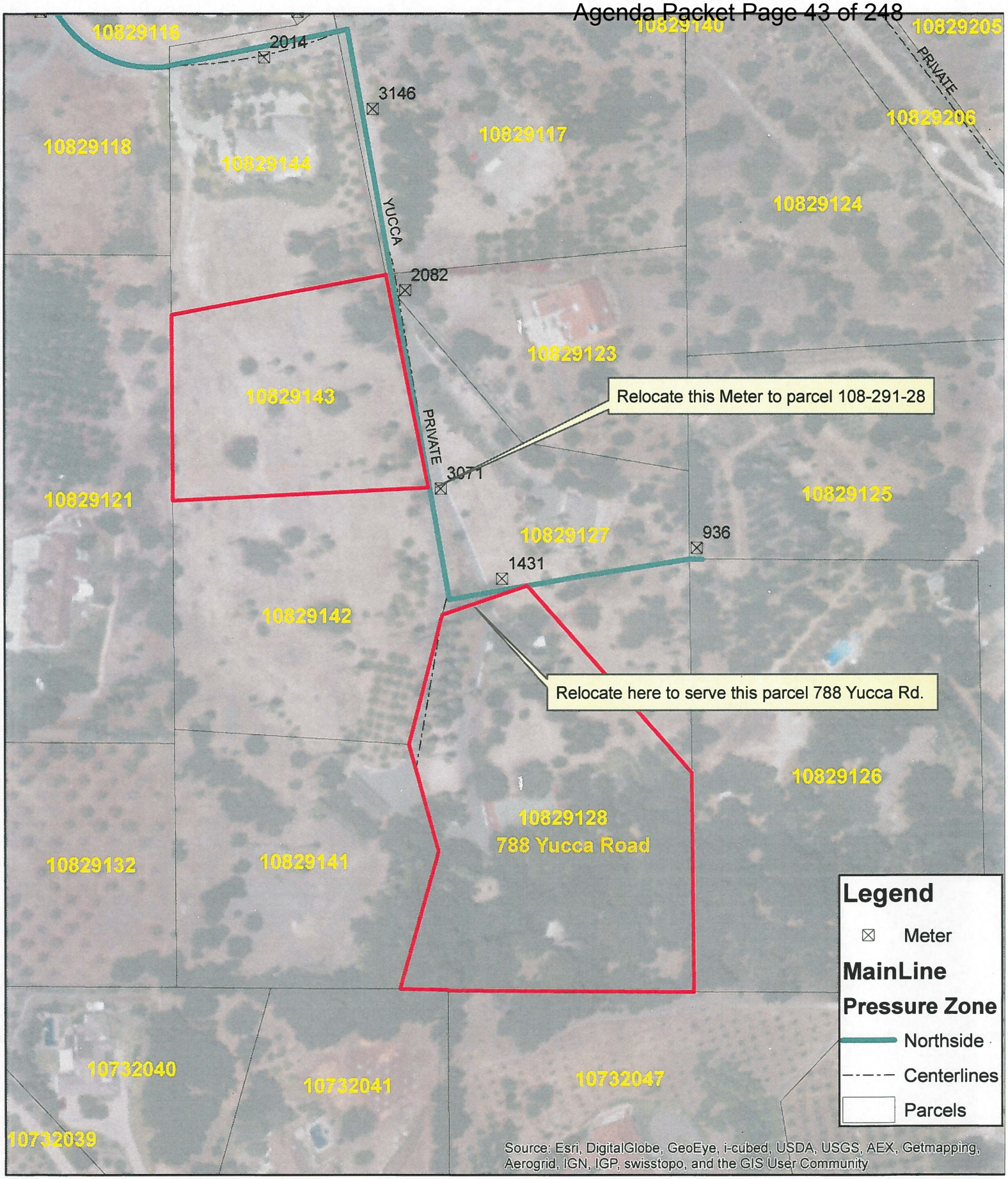

N

RAINBOW MUNICIPAL WATER DISTRICT

0 50 100 200 300 400 Feet

Smith Family Trust Meter Relocation

DISCLAIMER:

This map represents a visual aid intended to assist Rainbow Municipal Water District personnel with the management of the Water System facilities. Data provided hereon is not a guarantee of actual field conditions nor a substitute for record drawings and field verification.

July 21, 2017

Rainbow Municipal Water District
3707 Old Highway 395
Fallbrook, CA 92028

RE: Permission for Encroachment
Water Meter Relocation

To Whom It May Concern:

The Smith Family Trust has proposed to relocate a 1 ½ inch water meter from a vacant land parcel they own (APN 108-291-43-00) to 788 Yucca Road which is also owned by The Smith Family Trust (APN 108-291-28-00).

Raymond C. Smith, the Trustee of The Smith Family Trust is my father.

Permission is hereby granted to The Smith Family Trust to encroach on the property at Yucca Road (APN 108-291-42-00) for the purpose of the water meter relocation.

Please call my office at (949)635-1970 for any questions.

Sincerely,

Sheryl Lackey

STATE OF IDAHO, COUNTY OF KOOTENAI
ON THIS 25th DAY OF July 20 17
BEFORE ME A NOTARY PUBLIC IN AND FOR SAID STATE,
PERSONALLY APPEARED Sheryl Lackey
KNOWN TO ME TO BE THE PERSON WHOSE NAME SUBSCRIBED TO THE WITHIN INSTRUMENT, AND ACKNOWLEDGED TO ME THAT ~~HE~~ (SHE) (THEY) EXECUTED THE SAME.
Molly Patterson NOTARY PUBLIC
COMMISSION EXPIRES ON 08-04-2020

MOLLY PATTERSON
NOTARY PUBLIC
STATE OF IDAHO

Jeff Lackey

STATE OF IDAHO, COUNTY OF KOOTENAI
ON THIS 25th DAY OF July 20 17
BEFORE ME A NOTARY PUBLIC IN AND FOR SAID STATE,
PERSONALLY APPEARED Jeffery Lackey
KNOWN TO ME TO BE THE PERSON WHOSE NAME SUBSCRIBED TO THE WITHIN INSTRUMENT, AND ACKNOWLEDGED TO ME THAT HE ~~(SHE)~~ (THEY) EXECUTED THE SAME.
Molly Patterson NOTARY PUBLIC
COMMISSION EXPIRES ON 08-04-2020

MOLLY PATTERSON
NOTARY PUBLIC
STATE OF IDAHO

June 20, 2017

Rainbow Municipal Water District
3707 Old Highway 395
Fallbrook, CA 92028

RE: Permission for Encroachment
Water Meter Relocation

To Whom It May Concern:

The Smith Family Trust has proposed to relocate a 1 ½ inch water meter from a vacant land parcel they own (APN 108-291-43-00) to 788 Yucca Road which is also owned by The Smith Family Trust (APN 108-291-28-00).

Raymond C. Smith, the Trustee of The Smith Family Trust is the grandfather of Gregory R. Zevely, Trustee of the Jayson Michael Zevely 2012 Trust and Jayson Zevely, the Beneficiary of the Jayson Michael Zevely 2012 Trust.

Permission is hereby granted to The Smith Family Trust to encroach on the property at 784 Yucca Road (APN 108-291-27-00) for the purpose of the water meter relocation.

Please call my office at (949)635-1970 for any questions.

Sincerely,

Gregory R. Zevely
Trustee of the Jayson Michael Zevely 2012 Trust

Acknowledgment of Individual

STATE OF WASHINGTON

COUNTY OF KING

On this day personally appeared before me **Gregory Zevely**, to me known to be the individual(s) described in and who executed the within and foregoing instrument, and acknowledged that he signed the same as his free and voluntary act and deed, for the uses and purposes therein mentioned.

Given under my hand and seal of office this 29th day of June, 2017.

Everly Bang

Notary Public residing at Seattle, WA

Printed Name: Everly Bang

My Commission Expires:

March 11, 2018

RAINBOW MUNICIPAL WATER DISTRICT
Committed to Excellence

BOARD ACTION

BOARD OF DIRECTORS

August 22, 2017

SUBJECT

DISCUSSION AND POSSIBLE ACTION TO PROCEED WITH DESIGN FOR THE ROBERT A. WEESE FILTRATION PLANT INTERCONNECT

BACKGROUND

The Weese Filtration Plant is in the southern portion of the District on Silverleaf Lane in Vista. The City of Oceanside purchases imported raw water from the San Diego County Water Authority (SDCWA) and treats it at the Weese Filtration Plant. Every year during SDCWA treated water shutdowns, the District rents and sets up a temporary pump near our Gopher Canyon Tank and works with the City of Oceanside to change operation valves to boost pressure so the District can pump water from the Weese Treatment Plant into our Gopher Canyon Tank. This serves as sole source of water for the zone during SDCWA shutdowns.

The District would like to construct permanent facilities that will tie into the Weese Filtration Plant and provide the District water during shutdowns. The permanent facilities would eliminate the labor and costs required to set up a temporary pump every year and streamline the water exchange process with the City of Oceanside. The total costs to rent, set up, monitor, maintain, and fuel the temporary pump each year vary depending on water demand, but range between $10,000 to $20,000. Fuel tanks are stored adjacent to the site in secondary containment, however there is the potential risk of spillage with storing fuel on site and having to refill the storage from time to time.

In addition, in our discussions with the City of Oceanside, there is the potential for the City to sell the District treated water during periods of time when they have excess capacity in the plant. This pump station would allow us to negotiate a contract that would feature a lower cost for treatment than what we pay to SDCWA currently. The exact amount of excess capacity available at any given time is heavily weather dependent, but the City of Oceanside expects to be able to provide the District approximately 1,400 Acre Feet per year during the winter months (November through April) and more capacity may be available once they expand their recycled water system and decrease their reliance on the plant. When the recycled system is complete in 3-4 years, the City estimates that several thousand more acre feet per year could become available. While no specific terms have been reached at this time, the City has indicated that the discount on treatment services would be around $100/AF, so the annual cost savings from this arrangement would be considerable.

DESCRIPTION

The Board approved the design services contract for the Weese Filtration Plant project in March to Infrastructure Engineering Corporation (IEC). Staff mentioned that they will bring this item back when more information is provided as an update to the Board and the return on investment. Since then, staff has had discussions with the City of Oceanside, received a basis of design report with alternatives on the project, updated costs and an update in cost savings. Attached is the basis of design report.

During the kick-off meeting for the project, Staff informed IEC that we have a 6-pump skid that was purchased to provide water to the Northside Zone during the rehabilitation of the reservoir. Staff asked IEC to look at the potential to use the skid for this project.

The basis of design report was brought to the Engineering Services Committee on August 2, 2017 and a summary presentation made by IEC. The Engineering Services Committee agreed with recommended Alternative 1, to use the District's portable pump skid and recommend site in the City of Oceanside's plant. With a total cost of the project (including design, inspection, project management and construction) of about $850,000, the discount on 1400 AF per year will have a return on investment of approximately 6 years. Once the City's recycled water program comes on line, we expect the annual volume to be at least 3000 acre feet which would have a savings of $300,000 per year. Even if the recycled water system does not come to fruition, after the sixth year this project will return a savings of approximately $140,000 per year in water costs.

The final design is required to complete negotiations with the City. Staff will bring agreements with the City for Board approval prior to proceeding with construction.

POLICY/STRATEGIC PLAN KEY FOCUS AREA

Strategic Focus Area One: Water Resources. The connection to the Weese Filtration Plant will give RMWD a permanent solution to water supply issues during the SDCWA treated water shutdowns. Also, it will diversify our water supply by adding the possibility of importing treated water from Oceanside during normal operation.

BOARD OPTIONS/FISCAL IMPACTS

The project is included in the District's CIP budget, with $1,200,000 total in expenditures expected in years 2016-2018. An updated construction engineer's estimate of $620,000 is provided in the report. Total estimated project costs are expected to be around $850,000, which includes inspection, project management and easement acquisitions.

1) Authorize staff to proceed with the design for the Robert A. Weese Filtration Plant Interconnect.

2) Do not proceed with the design for the Robert A. Weese Filtration Plant Interconnect. District will use temporary facilities for SDCWA shutdowns only.

3) Provide other direction to staff.

STAFF RECOMMENDATION

Staff recommends Option 1.

Sherry Kirkpatrick
Engineering Manager

August 22, 2017

R.A. Weese Filtration Plant Interconnect Project

BASIS OF DESIGN MEMORANDUM

Prepared for:

RAINBOW MUNICIPAL WATER DISTRICT
Committed to Excellence

Rainbow Municipal Water District
3707 Old Highway 395
Fallbrook, CA 92028

Prepared by:
Infrastructure Engineering Corporation
302 Mission Avenue, Suite 202
Oceanside, CA 92054
080. RNBW.0015

August 2017

IEC

TABLE OF CONTENTS

1.0 PROJECT BACKGROUND

2.0 HYDRAULICS AND PUMP STATION SIZING CRITERIA

3.0 PUMP STATION SITING

4.0 PUMP STATION CONFIGURATION

5.0 PUMP STATION EQUIPMENT AND FEATURES

6.0 PIPLINE DESIGN

7.0 STRUCTURAL DESIGN

8.0 ENVIRONMENTAL CONSIDERATIONS

9.0 ELECTRICAL DESIGN

10.0 CONTROL, NETWORK, AND DISTRICT AND CITY OF OCEANSIDE COMMUNICATION

11.0 ENGINEER'S OPINION OF PROBABLE CONSTRUCTION COST

Appendix A Technical Memorandum No. 1
Appendix B Engineer's Opinion of Probable Construction Costs
Appendix C Pump Information for Cornell Pumps

1.0 PROJECT BACKGROUND

The Rainbow Municipal Water District (District, RMWD) covers approximately 80 square miles in North County San Diego County and currently relies 100% on treated imported water from the San Diego County Water Authority (SDCWA). Every year for maintenance purposes SDCWA shutdowns specific aqueducts barrels. Depending on which barrels are scheduled to be offline, the District loses these connections temporarily, requiring District operations staff to set up temporary pumps throughout the District to move water from one zone to the other to keep customers in water. There is the opportunity to work with District's neighboring agency, the City of Oceanside (City), to obtain water during SDCWA shutdowns and possibly at other times of the year when the City's R.A. Weese Filtration Plant (Weese WFP) has excess capacity.

The WFP is located in the southern portion of the District on Silverleaf Lane in Vista. The City Oceanside purchases imported raw water from the SDCWA and treats it at the WFP. Currently during SDCWA treated water shutdowns, the District sets up a temporary pump near the Gopher Canyon Tank and coordinates with the City to change operation valves, so that the District can pump water from the Weese WFP into the District's Gopher Canyon Tank.

The primary goal of this project is for the District to construct permanent facilities, to obtain water from the Weese WFP. As a secondary goal, a new permanent pump station installation would facilitate receiving water from Oceanside at other times of the year. Permanent facilities, which would be capable of responding quickly and accurately to system flow rate changes, would help the District obtain additional water from the City and would also provide the City with more operational flexibility at the Weese WFP during low flow periods. The City is expanding their reclaimed water program which will likely result in an increased amount of treated water being available from the Weese WFP in the future. The general location of the potential pump station sites and piping in the area is shown in Figure 1-1.

Technical Memorandum 1, *HYDRAULIC EVALUATION – FLOWS, PUMPING ALTERNATIVES, AND USE OF THE DISTRICT'S EXISTING PUMP SKID*, dated June 19, 2017, (TM 1) provides preliminary investigative information associated with the project. TM 1 is included in Appendix A of this report.

The purpose of this Basis of Design Memorandum (BODM) is to summarize the hydraulics, evaluate pump station siting, select a pump station configuration, establish pipeline design criteria and pertinent details, and present the structural and electrical design criteria as well as any potential environmental issues. The BODM also provides an Engineer's Opinion of Probable Construction Cost (EOPPC).

PROJECT AREA EXHIBIT

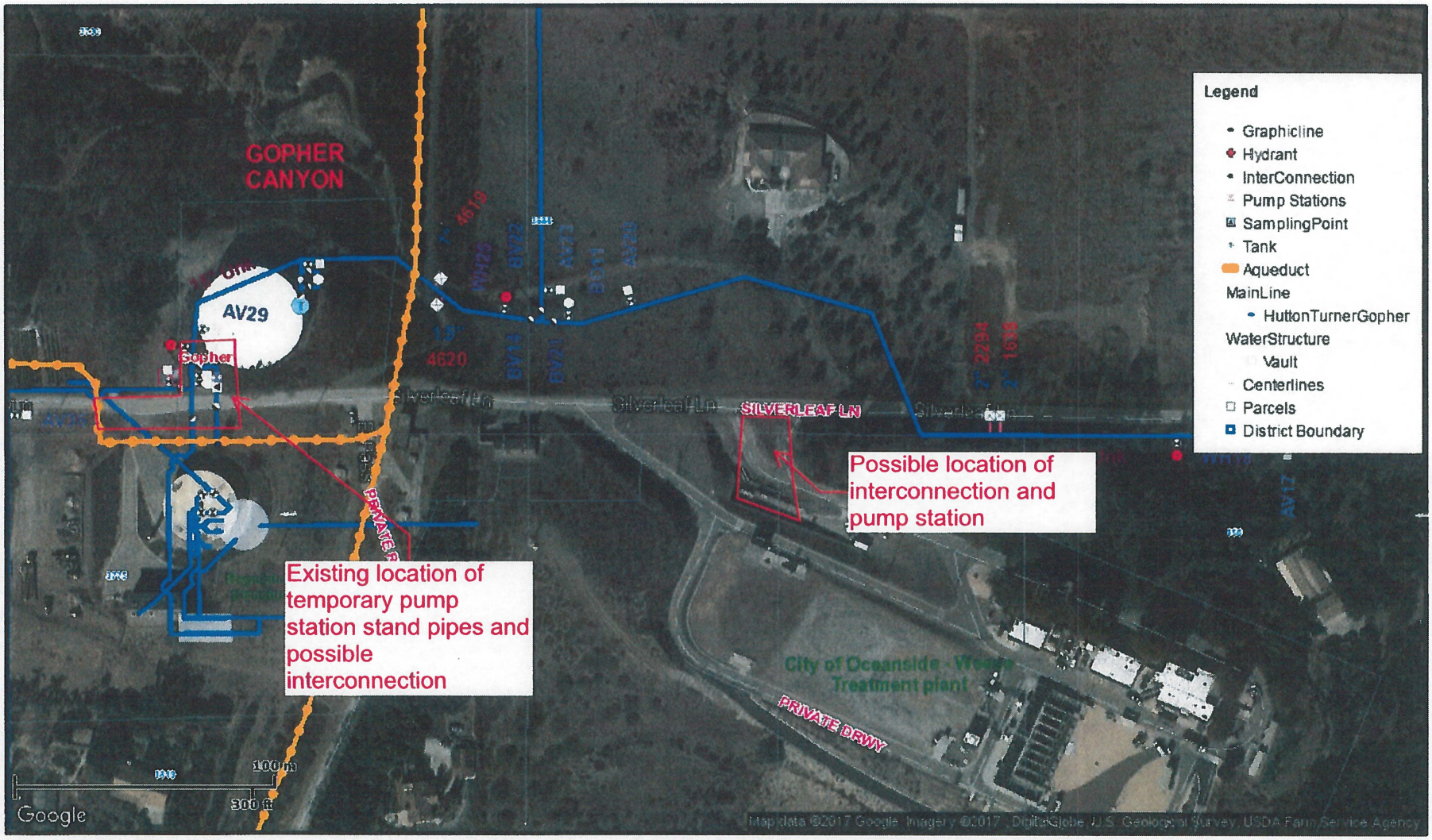

1" = 188 ft	Weese Treatment Plant	01/31/2017	N W E S	RAINBOW MUNICIPAL WATER DISTRICT

This map represents a visual display of related geographic information. Data provided hereon is not a guarantee of actual field conditions. To be sure of complete accuracy, please contact Rainbow Water District staff for the most up-to-date information.

FIGURE
1-1

2.0 HYDRAULICS AND PUMP STATION SIZING CRITERIA

At the Kickoff Meeting, District staff requested that consideration be given to the feasibility of direct gravity flow from the Weese WFP into the District's distribution system utilizing solely a flow control facility, without need for a pump station. The District's also requested that their existing skid mounted portable pump station be considered for use as part of the project. The available flows from the Weese plant have been discussed between the District and the City and are documented in TM 1. A brief summary of TM 1 follows.

2.1 District Demands and Water Available from the Weese WFP

The monthly flow capacity available from the City has been estimated. The flow capacity could range from 1.2 mgd to 4.5 mgd over a 6 non-summer month period. Actual flow capacities should be agreed upon with the City prior to final decisions on design capacity. It has been assumed that the City's water availability is based on low demands, which likely follow a similar pattern to that of the District's. Estimated water availability and District system demands derived from the District's hydraulic model are compared in the following table.

The available flow from the Weese WFP and the District's system demands are presented in Table 2-1 below:

Table 2-1 Flows Available from the Weese WFP versus System Demands

Flows Available from the Weese WFP Versus System Demands		
Month	**Estimated Available Weese WFP Flows (mgd)**	**District System Demands (mgd)**
November	2.2	5.1
December	4.3	2.7
January	3.9	3.1
February	4.5	2.5
March	3.2	3.9
April	1.2	6.1

Based on the water availability estimates, the City may be able to provide approximately 1,483 AF per year during the November through April period, which comprises about 80% of the District's demand in that part of the District's system over the same period. Since the City is expanding their reclaimed water program, there is likely to be an increased amount of treated water available from the Weese WFP in the future.

2.2 Pumping Requirements

The City has indicated that as much as 4.5 mgd could be available from the Weese Plant. The data in Table 2-1 suggests that a firm capacity of about 3.2 mgd (in March) may be all that is necessary. It is reasonable, however, to design the pump station with a capacity of 4.5 mgd, so that the District has the ability to capture any additional treated water whenever it may be available, even on a daily basis. The additional pump station capacity would be achieved at minimal extra cost.

3.0 PUMP STATION SITING

3.1 Pump Station Siting Options and Option Analysis

Based on the site visit conducted with District staff and discussions during the kickoff meeting, there are two potential locations for the pump station and inter-connections. One location is on District property at the Gopher Canyon Tank site (Refer to Figure 3-1) and the other is at the Weese WFP (Refer to Figure 3-2). Both District and Oceanside staff favor the Weese Water Filtration Plant site. The advantages/ disadvantages of each of the sites are provided below:

Gopher Canyon Tank Site Advantages/Disadvantages

Advantages

- Pump station and inter-connections are on District property
- Less discharge piping required

Disadvantages

- Extended effort for Oceanside's staff is necessary to facilitate operation of the proposed pump station: The 30-inch treated water bypass pipeline adjacent to the Gopher Canyon Tank is usually not in service. Manual operation of valves and special field adjustments by City plant personnel would be necessary to provide suction pressure to the pump station.
- Higher capital cost would be required at this location due to the costs associated with maintaining suction pressure to the proposed pump station. The 30-inch treated water bypass pipeline does not run full, which would require a weir box or a specially designed below grade pump station to be constructed at additional cost.

Weese Water Filtration Plant Site Advantages/Disadvantages

Advantages

- No operational requirement for Oceanside plant staff to facilitate operation of the proposed pump station. The suction line of the proposed pump station would connect to an existing exposed 30-inch treated water line extending from the Weese Filtration Plant chlorine contact tank. The pump station would operate without the need for City staff to operate valves.
- Increases the likelihood of Oceanside providing water to the District beyond just during SDCWA aqueduct shutdown periods. The proposed pump station would be designed with precise flowrate control making transfers of the treated water predictable and easy to operate without disrupting operations of the Weese Filtration Plant.

Disadvantages

- Pump station and inter-connection are not on District property requiring greater coordination with the City for easements and electrical service.
- As much as 200 feet of additional discharge piping may be required.

3.2 Recommended Project Site

The Weese WFP site is recommended based on the above discussion.

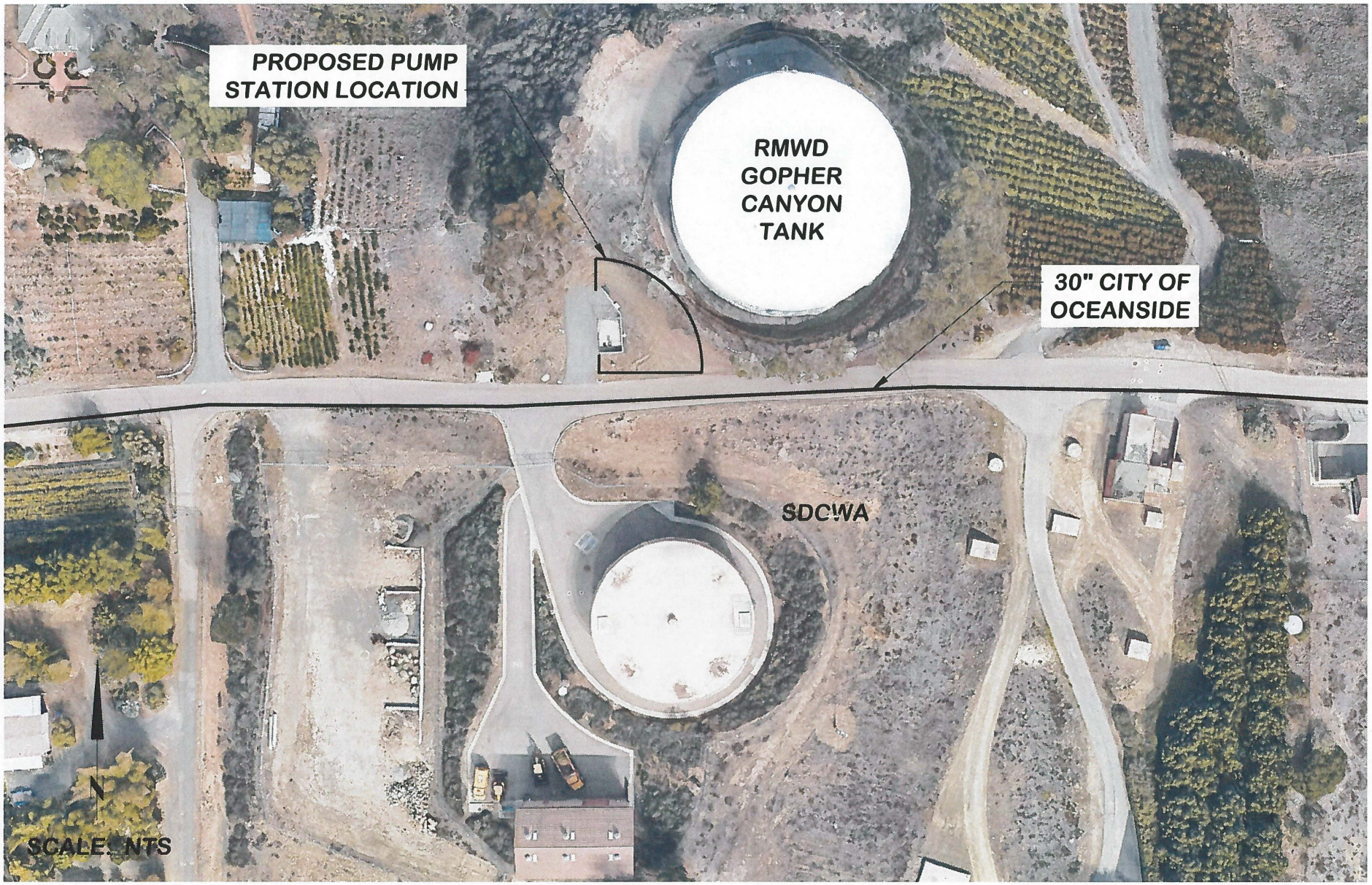

Infrastructure ENGINEERING CORPORATION

14271 Danielson Street
Poway, California 92064
T 858.413.2400 F 858.413.2440
www.iecorporation.com

Rainbow Municipal Water District
R.A. Weese Filtration Interconnect

Gopher Canyon Tank Site

FIGURE

3-1

Infrastructure ENGINEERING CORPORATION
14271 Danielson Street
Poway, California 92064
T 858.413.2400 F 858.413.2440
www.iecorporation.com

Rainbow Municipal Water District
R.A. Weese Filtration Interconnect

Weese WFP Site

FIGURE
3-2

4.0 PUMP STATION CONFIGURATION

4.1 Basic Hydraulic Operation and Configuration of the Facility

Different pump stations configurations for transferring water from the City to the District by both gravity and pumping were discussed in TM1. A new pump station with a flow control valve was recommended for implementation. The memorandum also determined that the District's existing trailer mounted pump station, which utilizes six Grundfos pumps, could potentially meet the flow conditions of the project, but the concept would be further developed in later stages of design.

4.2 Pump Station Alternatives and Alternatives Analysis

Three pump station alternatives are considered below: Alternative 1, which utilizes the District's six pump skid with minimal modifications; Alternative 2, which repackages the pumps and VFDs from the District skid into a conventional pre-engineered pump station package; and Alternative 3, which uses a new pre-engineered pump station.

Alternative 1: District Pump Skid with Minor Modifications

Utilizes the six District pump skid pumps, piping and electrical gear as packaged with minimal modifications. The skid would be permanently mounted to a concrete slab, add downstream flow control equipment and a PLC would be added, and the pump station would be enclosed within a ventilated metal building, reference Figure 4-1. This alternative would require separate programing of a new PLC for VFD control of the pumps and the flow control valve. A retaining wall will be necessary as seen in Figure 4-2.

The Engineer's Opinion of Probable Construction Cost (EOPCC) for the Alternative 1 configuration is $200,000. Detailed EOPCCs for all three of pump configuration alternatives are included in Appendix B.

Advantages

- Lowest cost alternative and utilizes the District's otherwise unused portable pumps skid.
- Slightly better electrical efficiency than Alternative 3.

Disadvantages

- Non-conventional use of a portable pump station to be installed permanently within a building results in reduced access for operations and maintenance.
- Will not easily facilitate an individual pump testing loop, but not a necessity.
- The VFD switch gear is obsolete with limited support from the manufacturer, Danfos, making obtaining parts and service prohibitive in the future. The pump motors are not inverter rated and thus subject to reduced operational life cycle when used with VFD's. The existing Baldor motors are no longer manufactured.

Alternative 2: Repackage District's Pump Skid

EFI, a pre-engineered pump station provider, would repackage the existing pumps and VFDs from the District's six pump skid, discarding the existing piping and mounting skid, provide new piping, (including pump testing loop), downstream flow control equipment, a new PLC and a pump station enclosure with ventilation and maintenance access doors, as seen in Figure 4-3. A retaining wall will be necessary as seen in Figure 4-4. Programing of the PLC for VFD's and the flow control valve would be performed by EFI. The EOPCC for the configuration of Alternative 2 is $570,000.

Advantages

- Pumps and associated electrical equipment are easier to access and repair than Alternative 1.
- Facilitates an individual pump testing loop.
- Utilizes portions of the District's otherwise unused portable pump skid.
- Slightly better electrical efficiency than Alternative 3.

Disadvantages

- Highest cost
- The VFD switch gear is obsolete with limited support from the manufacturer, Danfos, making obtaining parts and service prohibitive in the future. The pump motors are not inverter rated and thus subject to reduced operational life cycle when used with VFD's. The existing Baldor motors are not currently manufactured any longer.
- Largest footprint
- More pumps and electrical equipment that Alternative 3 and more potential points of failure.

Alternative 3: New Pre-engineered Pump Station – Three Pump Configuration

EFI, a pre-engineered pump station provider, provides a new pre-engineered pump station. The pump station design would include a two duty with one standby pump configuration using constant speed pumps. (Additional information for the selected Cornell pump is provided in Appendix C.) The piping arrangement would include a pump testing loop and downstream flow control equipment. The pump station would also include new electrical and controls and a pump station enclosure with ventilation and maintenance access doors, as seen in Figure 4-3. A retaining wall will be necessary as seen in Figure 4-4. Programing of the PLC for VFDs and the flow control valve is performed by EFI. The EOPCC for the Alternative 3 configuration is $480,000.

Advantages

- Equipment and associated electrical equipment is easier to access and repair than Alternative 1.
- Facilitates an individual pump testing loop.
- All pumps and electrical equipment are new.
- Smaller footprint than Alternative 2.
- Fewer pumps and corresponding electrical gear than Alternatives 1 and 2.
- No VFDs and associated PLC programing.

Disadvantages

- Does not utilizes the District's otherwise unused portable pumps skid.
- Cost exceeds that of Alternative 1 by about $280,000.

4.3 Recommended Pump Station Alternative

Based on the evaluation above, Alternative 1 - District Pump Skid with Minor Modifications, is the recommended alternative. The reasons for the selection include:

- Lowest cost alternative (refer to financial detail below).
- Utilizes the District's otherwise unused portable pump skid.
- Slightly better electrical efficiency than Alternative 3.
- Small footprint.

District staff, including operations and maintenance staff, evaluated the potential increased risk of equipment failure, inconvenience of future maintenance, and related material expenses and concluded that the project cost saving associated with Alternative 1 outweigh the advantages of the other two alternatives.

Based on an estimated 1,483 AF available from the City, and an anticipated savings $100/AF compared to purchasing treated water from SDCWA, the savings is $148,000 per year. Specifics of capital expenditures, savings and payback are presented below:

- Alternative 1 project has a capital cost of $620,000 versus $900,000 for Alternative 3, a saving $280,000.
- Alternative 1 has a return on investment (ROI) of 22% versus Alternative 3 ROI of 15%.
- Alternative 1 has a payback of 4.6 years versus the Alternative 3 payback of 6.7 years.

The City is expanding their reclaimed water program which will likely result in an increased amount of treated water being available from the Weese WFP in the future. This scenario could potentially improve on the ROI and payback values above.

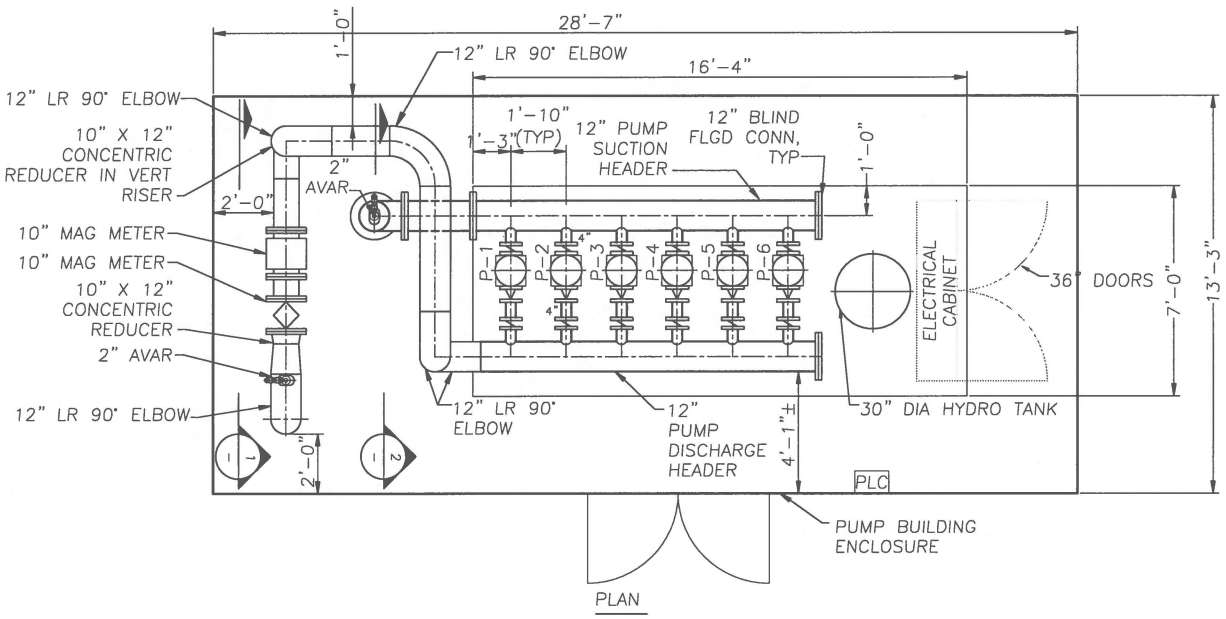

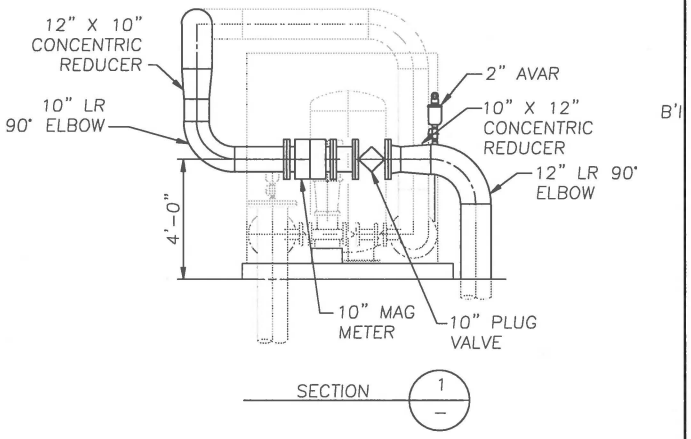

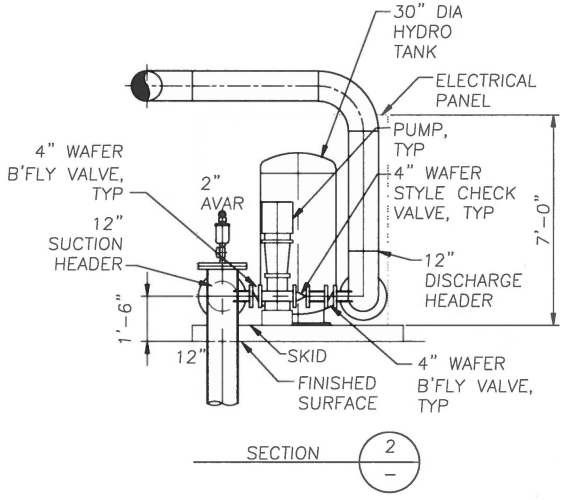

Infrastructure ENGINEERING CORPORATION 14271 Danielson Street Poway, California 92064 T 858.413.2400 F 858.413.2440 www.iecorporation.com	Rainbow Municipal Water District R.A. Weese Filtration Plant Interconnect Alternative 1 - District Skid with Minor Modifications	FIGURE 4-1

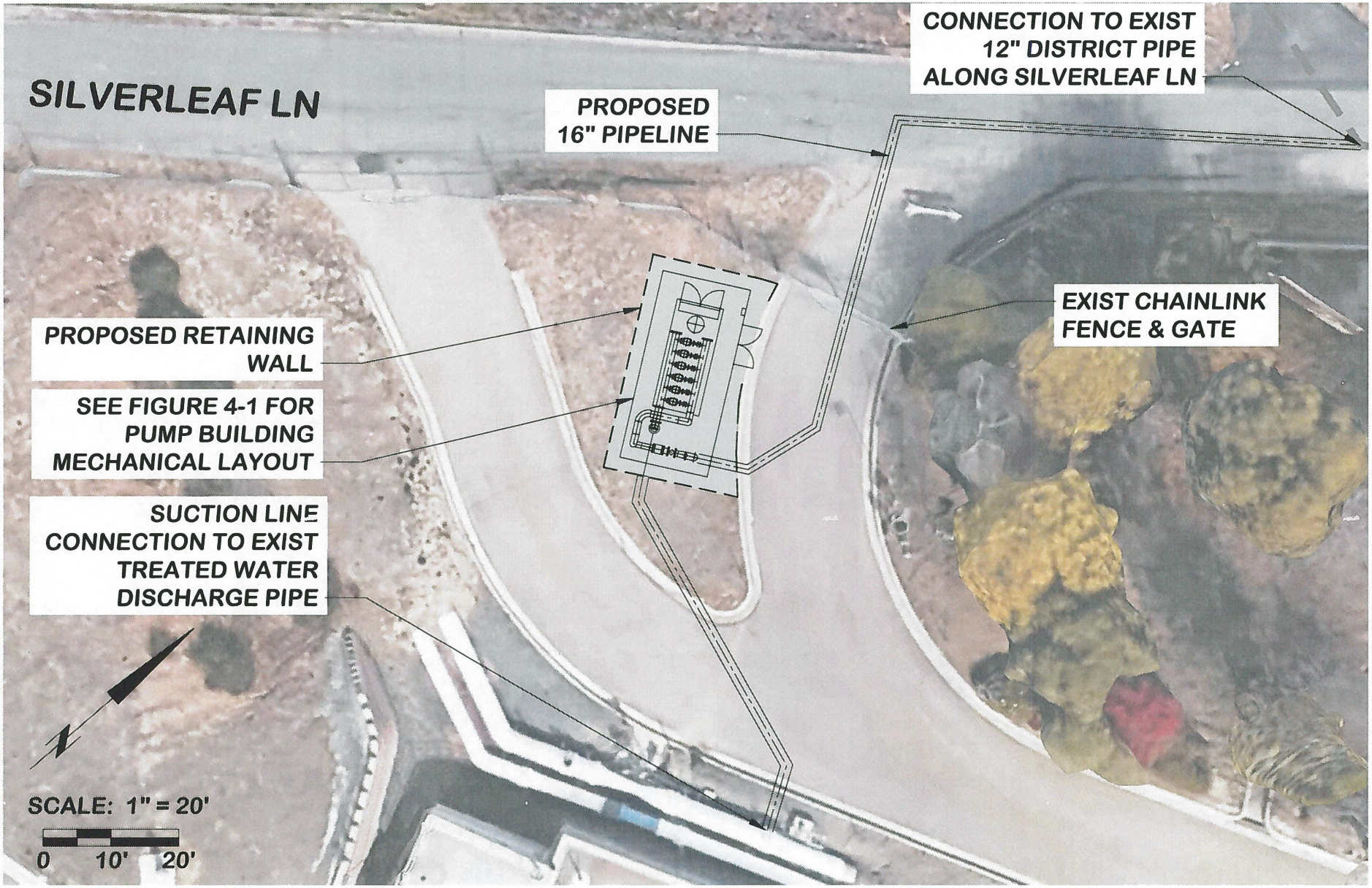

Infrastructure ENGINEERING CORPORATION
14271 Danielson Street
Poway, California 92064
T 858.413.2400 F 858.413.2440
www.iecorporation.com

Rainbow Municipal Water District
R.A. Weese Filtration Interconnect

Site Alternative 1 - District Skid with Minor Modifications

FIGURE
4-2

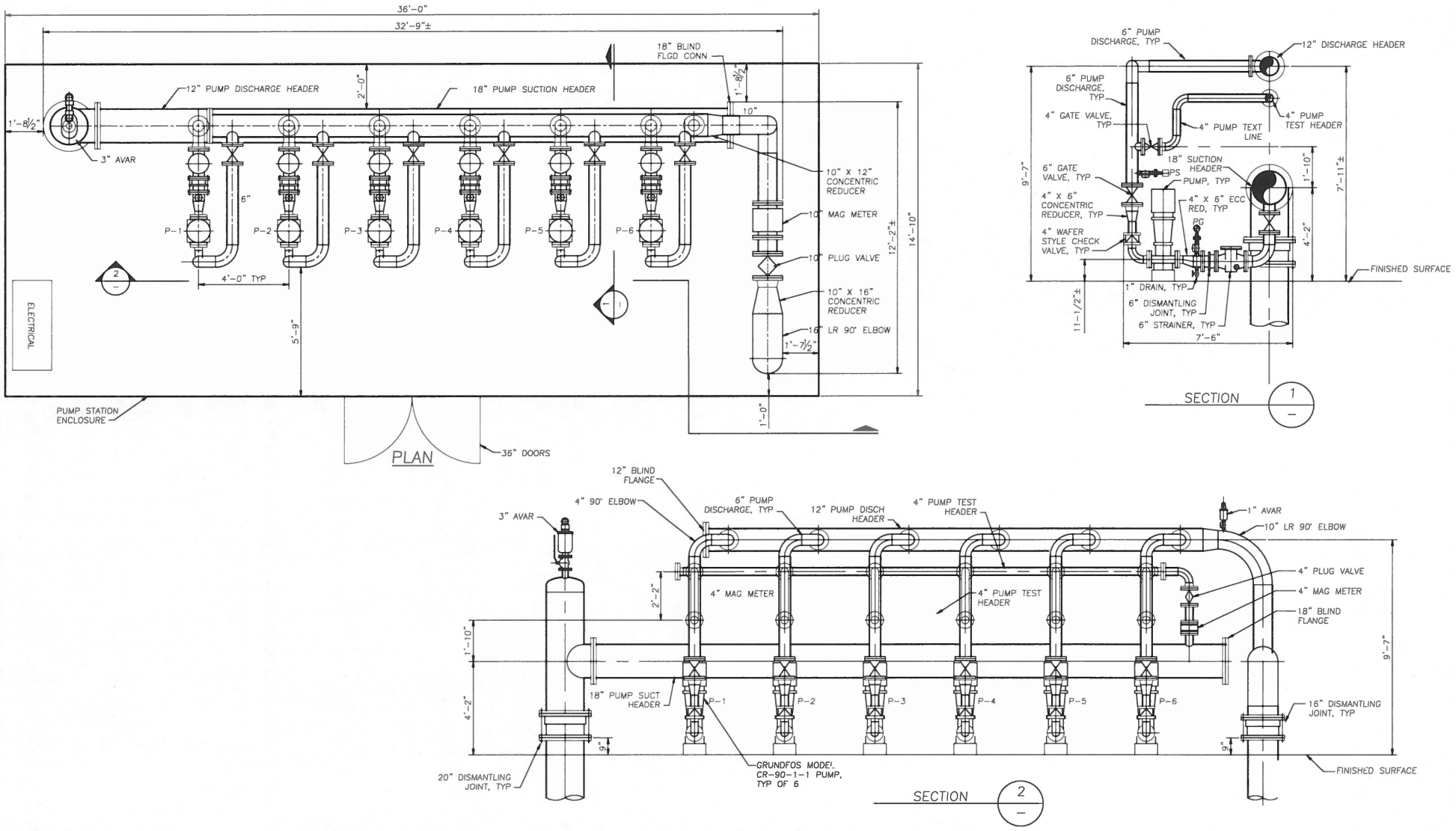

Infrastructure

14271 Danielson Street
Poway, California 92064
T 858.413.2400 F 858.413.2440
www.iecorporation.com

Rainbow Municipal Water District
R.A. Weese Filtration Plant Interconnect

Alternative 2 - Repackage of District Pump Skid

FIGURE
4-3

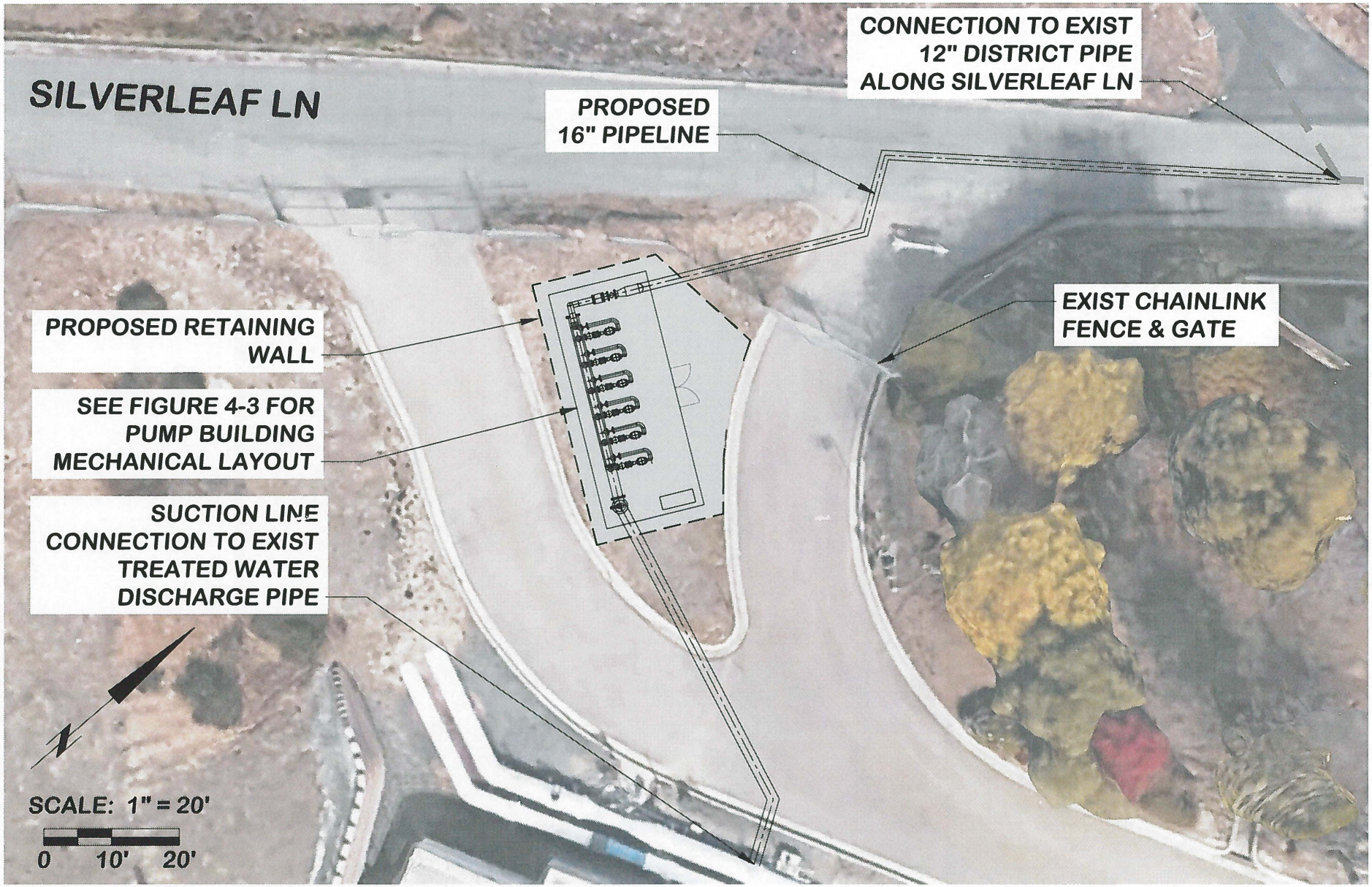

Infrastructure ENGINEERING CORPORATION
14271 Danielson Street
Poway, California 92064
T 858.413.2400 F 858.413.2440
www.iecorporation.com

Rainbow Municpal Water District
R.A. Weese Filtration Interconnect

Site Alternative 2 - Repackage of District Pump Skid

FIGURE
4-4

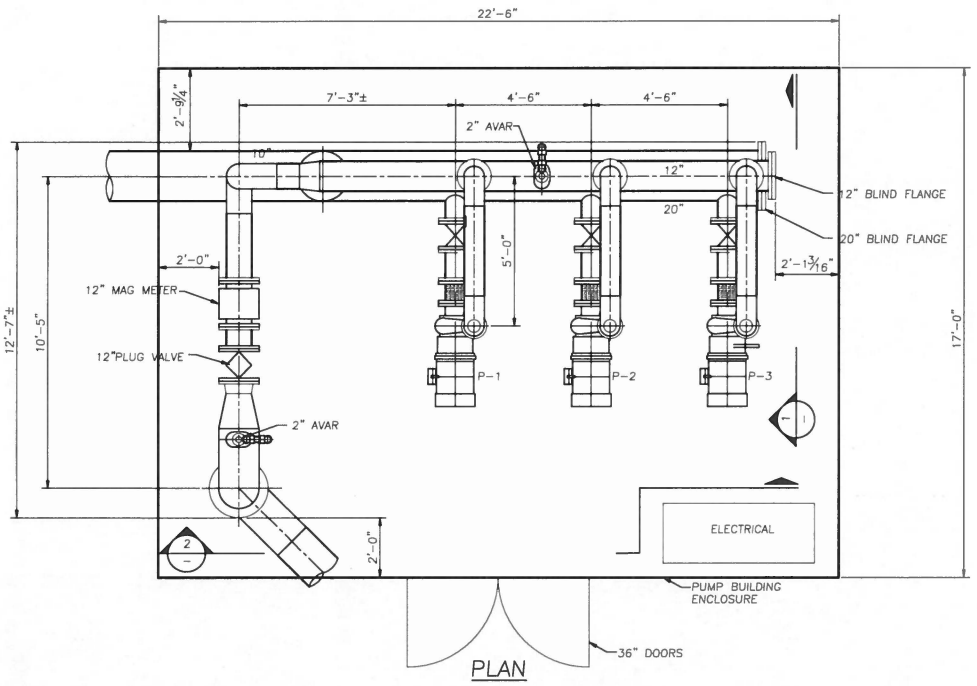

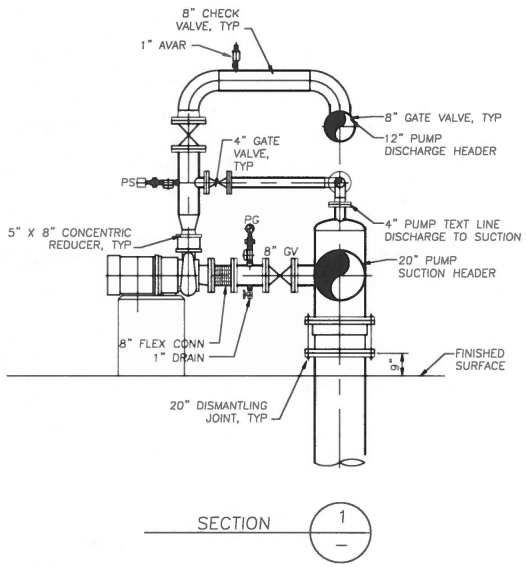

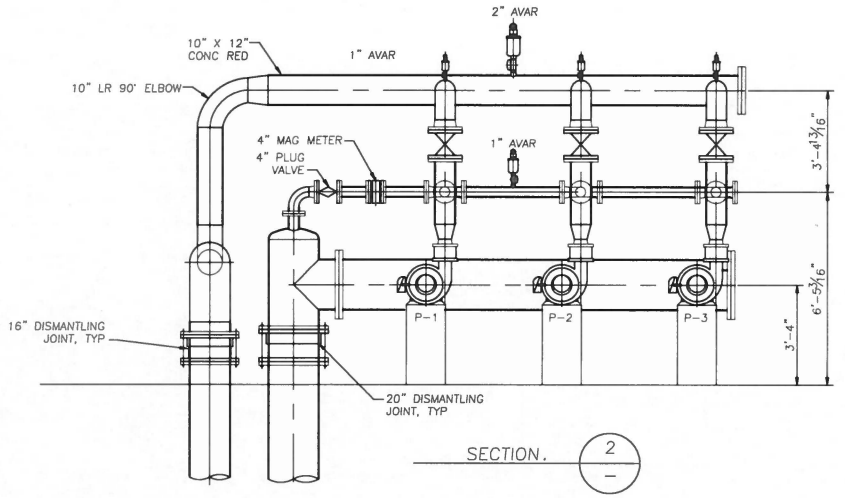

Infrastructure ENGINEERING CORPORATION

14271 Danielson Street
Poway, California 92064
T 858.413.2400 F 858.413.2440
www.iecorporation.com

Rainbow Municipal Water District
R.A. Weese Filtration Plant Interconnect

Alternative 3 - New Pre-Engineered Pump Station - Three Pump Configuration

FIGURE
4-5

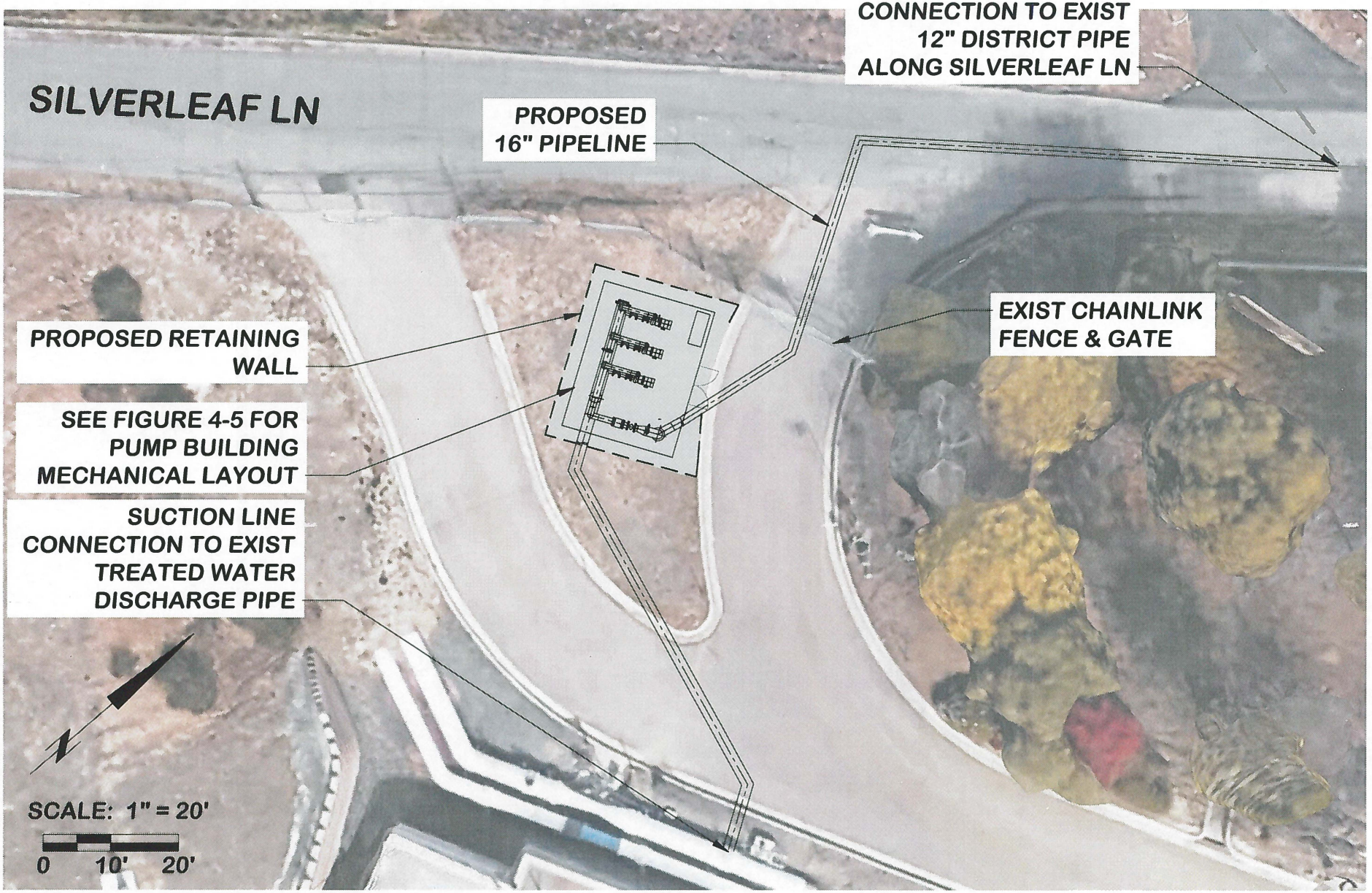

Infrastructure ENGINEERING CORPORATION
14271 Danielson Street
Poway, California 92064
T 858.413.2400 F 858.413.2440
www.iecorporation.com

Rainbow Municipal Water District
R.A. Weese Filtration Interconnect

Site Alternative 3 - New Pre-Engineered Pump Station - Three Pump Configuration

FIGURE
4-6

5.0 PUMP STATION EQUIPMENT AND FEATURES

5.1 Pumps

The recommended alternative, Alternative 1, utilizes the six Grundfos CR 90 series pumps that are part of the District's trailer mounted pump skid. The pumps curves and associated VFD operating envelopes are shown in Figure 5-1.

5.2 Flow Meters

Preferences for types of flowmeters to be used to measure potable water flows for billing purposes vary. During our site meeting with District Staff at the Weese WFP on July 10, 2017, Robert Gutierrez, the City's Water Utilities Manager, indicated the City's preference for electronic magnetic flow meters, and specifically recommend the Sparling Tiger Mag flow meter. If the Sparling Tiger Mag is acceptable to the District, this brand of flow meter will be specified.

5.3 Flow Control Valve Selection

Flow control downstream of the pump station is necessary because downstream pressure conditions vary between atmospheric and 45 feet. Back pressure substantially above atmospheric pressure is necessary to maintaining operation of the pumps on their pump curves. The selected alternative, Alternative 1 with the existing VFD's, allows for establishing a setpoint pressure and necessary back pressure in the discharge header for increasing operating efficiency and simplifying the hydraulics associated with the flow control valve.

The District has indicated a preference for Cla-Val type control valves, however, certain project conditions result in scenarios where the differential pressure across the valve is insufficient to actuate the valve with the necessary speed for good control. A good control valve choice for this project is an electric actuated eccentric plug valve. This valve has linear control characteristics, and is less than half the price of a Cla-Val. The red outlined rectangle in Figure 5-2 reflects the range of the differential pressures across the valve when the downstream pressures vary due to flow and changing levels in the Gopher Canyon tank. The figure shows that the range of differential pressures across the valve is within the 15% open and 80% open position of a 10-inch eccentric plug valve. The operating requirements are within the valves operating capabilities. A 10-inch electric actuated eccentric plug valve flow is the recommended control valve for this application.

5.5 Piping and Valves

All new piping and fittings within the pump station will be schedule 40 steel with an interior coating of fusion bonded epoxy with 15 mil minimum thickness. The exterior of the steel pipe (and of the structural steel pump station skid) will be coated with two coats of 2 part epoxy. A top-coat of acrylic polyurethane will be included on the exterior of the pipe. Valves will be per the District's standard with preference for the use of resilient seated gate valves.

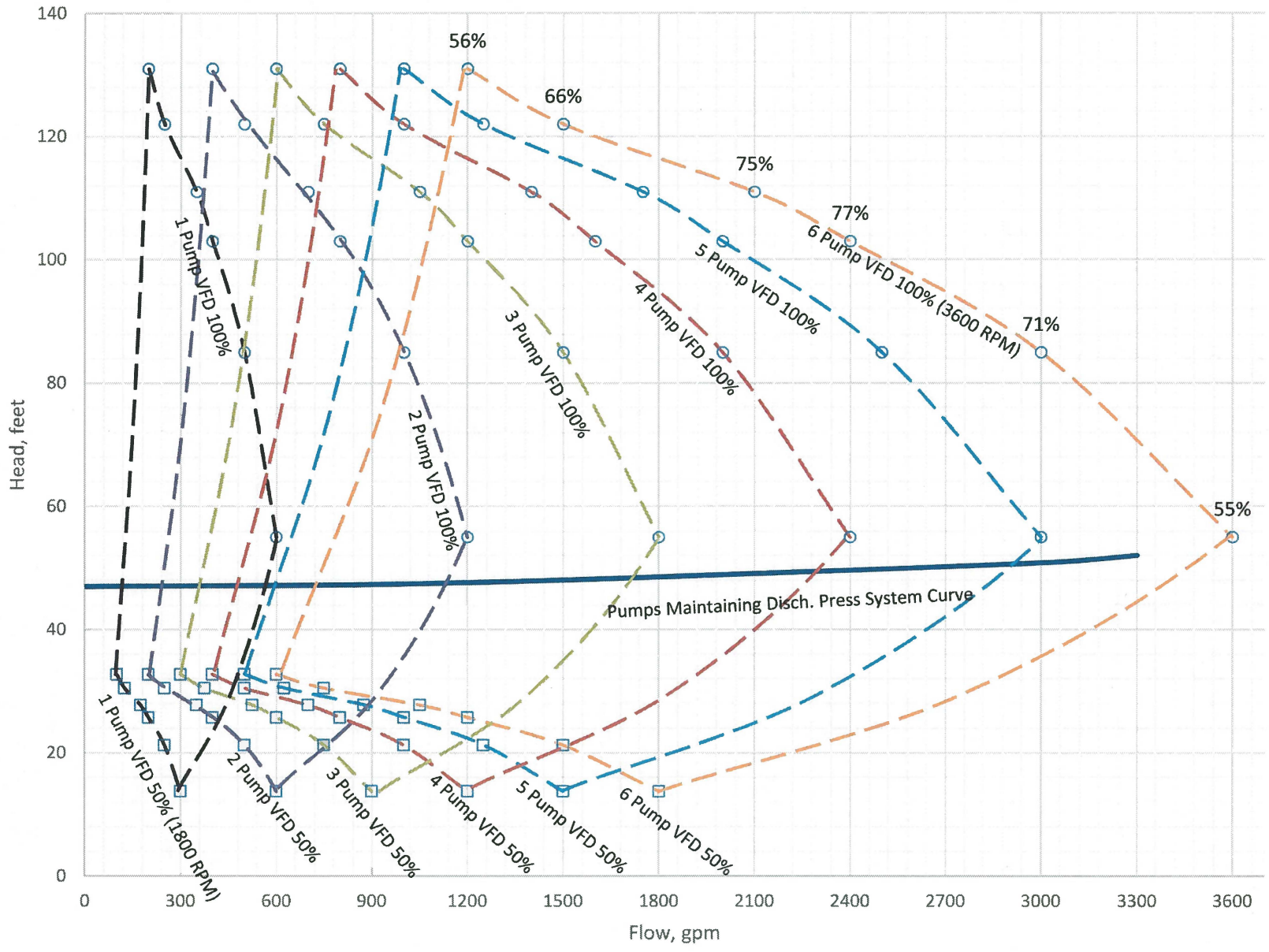

Infrastructure ENGINEERING CORPORATION
14271 Danielson Street
Poway, California 92064
T 858.413.2400 F 858.413.2440
www.iecorporation.com

Rainbow Municipal Water District
R.A. Weese Filtration Interconnect

Pump Skid Assembly Performance

FIGURE
5-1

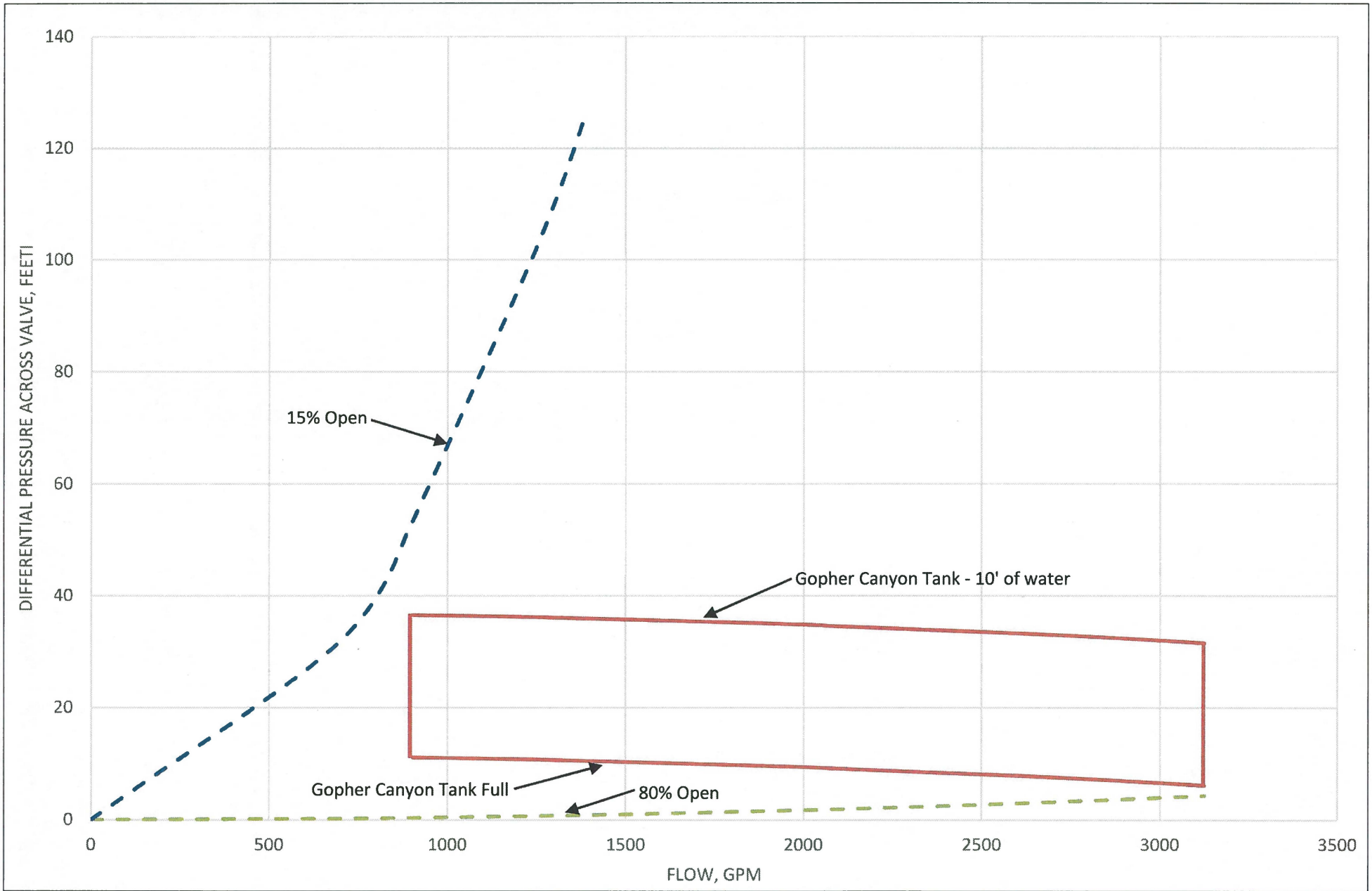

Infrastructure ENGINEERING CORPORATION
14271 Danielson Street
Poway, California 92064
T 858.413.2400 F 858.413.2440
www.iecorporation.com

Rainbow Municipal Water District
R.A. Weese Filtration Interconnect

10 - Inch Plug Valve Selection

FIGURE
5-2

6.0 PIPELINE DESIGN

This section presents a conceptual plan for the location and configuration of the suction and discharge pipelines associated with the pump station; see Figure 6-1. The information presented below and in the figure will be refined during subsequent stages of design as more detailed information regarding the existing facilities, topography, property boundaries, easements, and geotechnical conditions is developed.

6.1 Suction and Discharge Pipelines

- Suction Pipeline – The pump station suction pipeline will connect to the existing 30" treated water discharge pipe from the Weese WFP along a segment of the pipeline that is above ground. From the connection, the pipe will extend underground to the pump station under the westerly fork of what was the Weese WFP access road. The approximate length of the pipeline is 60 ft.

- Discharge Pipeline - The pump station discharge pipe will connect the pump station to the existing District system with a connection to the existing 12" OO Pipeline located east of the pump station. The pipeline alignment generally follows existing paved Silverleaf Lane, a private road approximately 16 ft wide. The approximate length of the pipeline is 135 ft.

- The pipelines will generally be designed to meet the RMWD Domestic Water, Recycled Water and Sanitary Sewer Facilities Construction Standards Manual (July 2016).

- Pipeline Diameter – The maximum flow rate in the pipelines is 4.5 MGD, or 3,125 gpm. A 16" diameter pipe allows a maximum velocity of 5 ft/sec, in accordance with District standards. There is potentially low suction head to the pumps so a 20" diameter suction line is planned to reduce headloss. The discharge pipe will be 16" diameter.

- Pipeline Pressures – The pressure on the suction side of the pump station is defined by the Weese WFP discharge pressures and will be a maximum of 5 psig along the pipeline. The pressure on the discharge pipeline is defined by the RMWD Gopher Canyon Tank with a maximum water surface elevation of 1011 feet. It will be a maximum of 30 psig at the low point of the pipe where it connects to the existing Pipeline OO. Due to low velocities in the discharge pipe and the configuration of the RMWD distribution system, any additional surge pressures caused by a sudden pump station shutdown are expected to be minimal and well within the capacity of the designed pipe.

- Pipe Material – The diameter and pressure requirements for the pipelines suggest that PVC pipe could be used. However, given that the pipe connections will require the fabrication of steel specials, coupled with the overall short length of the pipelines, CML&C steel pipe with double pass welded joints is recommended.

- Point of Connection (POC) to Supply Pipeline – The connection will require the installation of a 30" x 20" steel tee along the 30" treated water discharge pipe from the Weese WFP.

The 30" pipe is CML steel pipe with 3/16" wall thickness. The POC will be located along a 15-ft long spool of pipe that is between the existing venturi meter and the upstream butterfly valve. The exact POC will be coordinated with the City during the later stages of the design. It is assumed that a temporary shutdown of the 30" pipeline (using the upstream butterfly valve) is feasible to allow for the connection to be constructed, during our site meeting with District Staff at the R.A Weese Water Filtration Plant on July 10, 2017, Robert Gutierrez the City's Water Utilities Manager, indicated that the connection would most likely be possible during the winter months and in coordination with the SDCWA schedule.

- POC to Existing 12" Pipeline OO - The connection will require the installation of a tee along the 12" water distribution pipeline located in an easement along Silverleaf Lane. The 12" pipe is steel and described as Class 100 with tack welded joints (per the as-builts from 1974). The exact point of connection will be potholed during a later stage of design to confirm location and orientation of existing pipe (or by contractor prior to start of construction). The design will require that the pipe be exposed and the POC be at least 10 ft from nearest joint along Pipeline OO. If this is not feasible, it may be necessary to replace a longer section of the existing Pipeline OO. It is assumed that a temporary shutdown of the 12" pipeline is feasible to allow for the connection to be constructed.

- Connection to Pump Station - At the pump station, the suction and discharge pipelines will be connected to the station piping using flexible couplings with thrust restraints; these will be defined in greater detail as the design progresses.

- Pipe Appurtenances – Suction Pipeline:
  - 20" rising-stem gate valve on the outlet from the 30" pipeline.
  - 2" Manual air release valve on the upstream end.
  - 4" blow off at the downstream end near the pump station.

- Pipe Appurtenances – Discharge Pipeline:
  - 2" combination air-vacuum valve at the high point (within the pump station).
  - 4" blow off at the connection to Pipeline OO.
  - 12" resilient wedge gate valve on each leg of the tee.

- Pipe Burial: Where the pipelines are buried, they will have a minimum 4 ft of cover.

- Excavation conditions along Pipeline Trenches: There is no information available at this time describing existing subsurface conditions along the proposed pipeline alignments. More detailed information will be developed via a focused geotechnical investigation prepared as the design is developed.

- Cathodic Protection – The cement mortar lining and coating of the steel pipelines will provide corrosion protection unless the geotechnical investigation reveals severely corrosive soils. In such an event, additional protection may have to be investigated. The

pipelines will be isolated from the existing pipelines and the pump station via insulating flanges. Test stations will be located on each pipe segment and at the pump station to facilitate monitoring.

- Pavement Repair: Within the WFP the interior road and along Silverleaf Lane, the pipeline trench section will reflect RMWD Standard Drawing W-3. The pavement replacement will assume a standard "T" section with the AC and aggregate base to match the existing road section. Given that the road is private and parts of it may be in poor condition, coordination with the property owner's representatives should be conducted in advance of finalizing the design. This will allow for consensus on the degree of pavement repair to be provided by the contractor.

- Pipeline Construction and Traffic Control – Due to the narrow width of the paved Silverleaf Lane (approximately 16 ft), general vehicular access around the work area on the roadway will not be feasible during construction. The contractor will be required to develop a detailed traffic control and detour plan with appropriate notification to all area residents and the City, and signage that directs traffic flow at the entry/exit points to Silverleaf Lane.

6.2 Pipeline and Pump Station Right of Way

- Encroachment Permit for Pipeline along Silverleaf Lane - It is our understanding that Silverleaf Lane is a private road where ownership is based on the frontage to the road and that there is currently no Road Maintenance Agreement (RMA) in place. It is recommended that RMWD coordinate with the property owners (or their representative) in advance of construction to obtain a permit for work in this roadway.

- Easement for Discharge Pipeline - The existing OO Pipeline is approximately centered in a 20-ft wide easement that extends along APN 172-140-60 (owned by the Hecht Family Trust). It is envisioned that an additional easement will be required for the proposed discharge pipeline; Figure 6-1 shows the approximate limits of a 30 ft wide easement along Silverleaf Lane. A wider, temporary construction easement may also be needed to facilitate construction. This will be researched further and defined as the design is further developed.

- Easement for Suction Pipeline and Pump Station – These facilities will be located on City property (APN 172-210-10). It is envisioned that an easement will be required for the proposed facilities; Figure 6-1 shows the approximate limits of an easement that encompasses the pipeline and pump station and that also allows for maintenance access. A wider, temporary construction easement may also be needed to facilitate construction. This will be researched further and defined as the design is further developed.

6.3 Decision List

In order to meet the project schedule, the following specific decisions by the District are necessary:

- Confirm with the City and SDCWA regarding a construction schedule for connecting in the 30" pipeline on the R. A. Weese WFP pipeline.
- Confirm that at the point of connection to the 12" 00 Pipeline that installation of resilient wedge gate valve on each leg of the tee is desired.
- Confirm the District will provide public outreach regarding extent of paving in Silverleaf Lane.
- Verify that the District will coordinate reach out to residents and property owners along Silverleaf Lane regarding the project.
- Determine if RMWD has been granted an easement for the existing OO Pipeline with the pipeline approximately centered in a 20-ft wide easement that extends along APN 172-140-60, property owned by the Hecht Family Trust?
- District to provide input and agreements associated with defining necessary easements within the Weese WFP.
- District determine if an RMWD easement that extends along APN 172-140-60 (owned by the Hecht Family Trust).

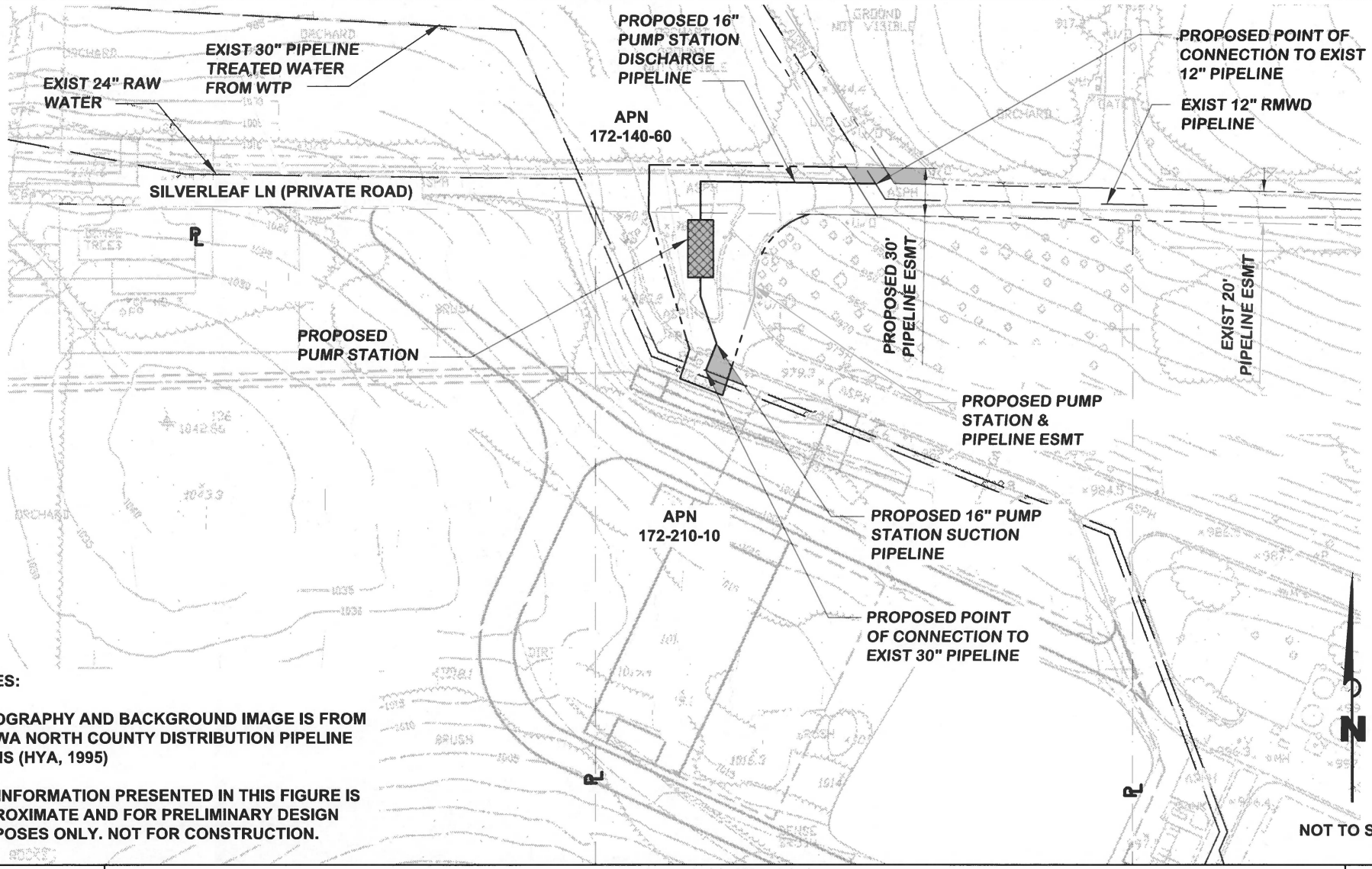

NOTES:

TOPOGRAPHY AND BACKGROUND IMAGE IS FROM SDCWA NORTH COUNTY DISTRIBUTION PIPELINE PLANS (HYA, 1995)

ALL INFORMATION PRESENTED IN THIS FIGURE IS APPROXIMATE AND FOR PRELIMINARY DESIGN PURPOSES ONLY. NOT FOR CONSTRUCTION.

Infrastructure Engineering Corporation
14271 Danielson Street
Poway, California 92064
T 858.413.2400 F 858.413.2440
www.iecorporation.com

Rainbow Municipal Water District
R.A. Weese Filtration Plant Interconnect

Concept Plan for Pump Station Suction and Discharge Pipeline

FIGURE 6-1

7.0 STRUCTURAL DESIGN

Structural design to be completed as part of this project includes the design of a concrete foundation for the pre-engineered Pump Station structure and a retaining wall not greater than 12 feet high. An Alternative Pump Station design to consist of a steel structure may be selected in lieu of the pre-engineered Pump Station with structural design to include steel roof and column framing and a concrete foundation.

7.1 Design Criteria

The following criteria shall be used for the design of all structural elements of this project:

Applicable Codes and Regulations

2016 CBC	California Building Code
ASCE/SEI 7-10	Minimum Design Loads for Buildings and Other Structures
ACI 318-14	Building Code Requirements for Structural Concrete
ACI 350-06	Code Requirements for Environmental Engineering Concrete Structures
ACI 530-14	Building Code Requirements and Specifications for Masonry Structures
AISC 360-10	Specifications for Structural Steel Buildings

Seismic Design Criteria: (to be verified by geotechnical report)

Seismic Design Category:		D			
Soil Site Class:		D			
Risk Category:		IV			
Seismic Importance Factor:		1.5			
Seismic Parameters:					
S_s	=	1.115 g	S_1	=	0.434 g
F_a	=	1.054	F_v	=	1.566
S_{MS}	=	1.175 g	S_{M1}	=	0.680 g
S_{DS}	=	0.784 g	S_{D1}	=	0.453 g

Wind Design Criteria:

Risk Category:	IV		
Method:	Analytical Procedure		
Basic Wind Speed:	V	=	115 mph (LRFD)
Exposure:	C		

Preliminary Soil Design Criteria: (to be verified by geotechnical report)

Allowable Bearing Pressure:	2,000 psf
Coefficient of Sliding Friction:	0.30
Soil Active Pressure:	40 pcf (for level backfill)
Soil Restrained Pressure:	60 pcf (for level backfill)
Soil Passive Pressure:	250 pcf

7.2 Pump Station Design

The structural design for the Pump Station shall consist of a concrete foundation to support the pre-engineered structure. The concrete foundation shall consist of an 8" slab-on-grade with turned down footings along the edge of the structure to support the pump station. Concrete pedestals, floor penetrations, and equipment curbs will be provided in the foundation to allow for the support or penetration of any mechanical equipment. Coordination with the pre-engineered metal building manufacturer will be required to coordinate loading and anchorage requirements. The metal building would consist of structural steel roof framing, and steel columns. The structure shall be fully enclosed and will house all pumps and associated equipment.

7.3 Retaining Wall Design

Retaining walls are proposed for the project. It is anticipated that the retaining wall shall be constructed as a conventional cantilever retaining wall with a concrete masonry until (CMU) or cast-in-place concrete stem wall and a concrete spread footing. Keyways shall be used as required to increase the sliding resistance of the retaining wall.

8.0 ENVIRONMENTAL CONSIDERATIONS

8.1 General Environmental Considerations for Pipeline Construction

Due to the narrow width of the paved Silverleaf Lane (approximately 16 ft), general vehicular pipeline construction will likely impact an area that is wider than paved roadway. If such areas are disturbed, this may require re-landscaping of disturbed vegetation along the sides of roadway. If habitat near the pipeline corridor is conducive to sensitive species, there could be construction limitations regarding sensitive noise receptors (e.g. gnatcatcher breeding season, raptors in tall trees) and and/or mitigation requirements. Pre-project monitoring may be needed to observe presence of sensitive species. If there is a potential for cultural resources in the area, excavation could require archeological monitoring. It is assumed that these and other construction related factors will be evaluated as part of an environmental assessment and CEQA compliance effort to be provided by the District.

8.2 Decision List

In order to meet the project schedule, the following specific decisions by the District are necessary:

- The District will develop and provide the necessary environmental assessment and CEQA documentation, and provide guidance to IEC on any constraints that may affect the design and/or construction.

9.0 ELECTRICAL DESIGN

This section presents a concept for implementing the electrical power at the WFP Interconnect Pump Station. The District pump station site is located on an operational City of Oceanside Water Filtration Plant. The existing plant has an SDG&E high voltage power already routed to the facility by means of overhead electrical lines, simplifies installation of electrical service at the District pumping station since a new circuit High-voltage from SDG&E would not need to be installed to the site. A power circuit feed from a nearby power pole would be installed by Contractor and SDG&E. The new installation would include a transformer to reduce the high voltage transmission power to 480VAC, 3 Phase, 3 wire service and a utility service meter.

A Main Switchboard (MSB) with the utility meter and a Main Circuit Breaker would be installed in the new pump station building. A 480VAC power circuit would be routed from the MSB to a three-section MCC (NEMA 1G). This MCC would provide power to the pump station Control Panel providing power and control to the pumps and flow control valve. One of the MCC sections would contain a 15KVA transformer and a 20-circuit panelboard to service ancillary building loads such as lights, fans, dehumidifier, and telemetry equipment. The third section would house a Remote Telemetry Unit (RTU) which holds a PLC and radio for remote monitoring and control of the station by District personnel.

10.0 CONTROL, NETWORK, AND DISTRICT AND CITY OF OCEANSIDE COMMUNICATION

10.1 Pump Station Control

The pump station will be controlled by means of a PLC. In general, flow control for the selected alternative, Alternative 1, requires both the use of the pump's VFD's to maintain a pressure setpoint in the discharge header, and the utilization of discharge flow meter and flow control valve. (VFDs along cannot control flow in this application because the discharge pressure would be to low and the pumps would not operate within the operating range of their curves.) The PLC calls for the correct number of pumps to be operating and the speed of the pumps to maintain the setpoint discharge pressure of about 25 psig. An electronic magnetic flow meter provides feedback to the PLC and adjustments are made to an electrically actuated plug valve to match the operator input flow setpoint of between 1.2 and 4.5 MGD (1.9 to 7.0 cfs) which also equates to 830 gpm and 3,1 gpm respectively. If flow control cannot be maintained a system fail alarm is sent to SCADA.

10.2 SCADA Network

Rainbow MWD and the City of Oceanside each have mature established SCADA systems. This pump station's SCADA system would be based on the Rainbow MWD system since it will be operated by their staff. But it would be beneficial to RMWD to utilize parts of the Oceanside Plant SCADA equipment. The City of Oceanside has a tall radio tower at the Weese WFP used to communicate with the City's SCADA Central site. RMWD communications to their SCADA Central will be greatly simplified if their antenna could be mounted on the radio tower.

10.3 District and City of Oceanside Communication

Since both the District and the City of Oceanside have to monitor water flow into the District's system from the Weese WFP, a communication link would need to be established between the two SCADA systems. Based on the terrain either a radio link between Weese PS and Oceanside Plant Central would need to be established or if there is a nearby plant communication conduit or trench a Fiber Optic cable could be utilized.

11.0 ENGINEER'S OPINION OF PROBABLE CONSTRUCTION COST

An Engineer's Opinion of Probable Construction Cost was prepared based on the mechanical and site work for Alternative 1 – District Pump Skid with Minor Modifications. Costs for civil/site work, suction and discharge piping, and electrical are included in Table 11-1 on the adjacent page to show the estimated cost of the complete project.

RAINBOW MUNICIPAL WATER DISTRICT
R.A. Weese Filtration Plant Interconnect Project
Table 11-1 Engineer's Opinion of Probable Construction Cost

Item	Qty.	Unit	Article	Unit Price	Total Price
1	1	LS	Mob/Demob/Insurance	$35,000	$35,000
2	22	YD	Concrete Slab	$600	$14,000
3	24	YD	Retaining Wall	$1,100	$27,000
4	143	YD	Excavation & Export	$90	$13,000
5	1	LS	Remove from trailer and install on slab	$10,000	$10,000
6	1	LS	10" Mag Meter	$10,000	$10,000
7	1	LS	10" & 12" Mete Piping	$20,000	$20,000
8	1	LS	Coating	$5,000	$5,000
9	375	SF	Metal Building	$80	$30,000
10	1	LS	Preconstruction Videos and Photographs	$2,000	$2,000
11	1	LS	Excavation Support System	$5,000	$5,000
12	1	LS	Storm Water & Non-Storm WPC	$5,000	$5,000
13	1	LS	Traffic Control	$3,000	$3,000
14	1	LS	20" Suction Pipe Connect to (E) 30" Pipe	$20,000	$20,000
15	60	FT	20" CML&C Steel Suction Pipe	$360	$21,600
16	1	LS	20" Suction Pipe Connection to Pump Station	$2,000	$2,000
17	1	LS	16" Discharge Pipe Connection to PS	$2,000	$2,000
18	135	FT	16" CML&C Steel Discharge Pipe	$290	$39,150
19	1	LS	16" Pipe Connection to (E) 12" Steel Pipe	$10,000	$10,000
20	1	EA	20" Gate Valve	$35,000	$35,000
21	3	EA	12" Resilient wedge gate valve	$10,000	$30,000
22	1	EA	2" Manual air release valve on suction pipe	$2,500	$2,500
23	2	EA	4" Blow off assembly on suction pipe	$6,000	$12,000
24	1	EA	4" Blow off on discharge pipe	$6,000	$6,000
25	34	Ton	Pavement AC	$200	$6,800
26	41	Ton	Aggregate Base	$100	$4,100
27	2	LS	Potholing (By Contractor)	$500	$1,000
28	1	LS	Cathodic Protection	$5,000	$5,000
29	1	LS	Conduit and Conductors	$16,000	$16,000
30	1	LS	Meter Pedestal	$3,000	$3,000
31	1	LS	MCC/Panels	$15,000	$15,000
32	1	LS	Lighting	$2,000	$2,000
33	1	LS	Transformers	$3,000	$3,000
34	1	LS	Antenna Mast	$36,000	$36,000
35	1	LS	Electrical Mics	$18,000	$18,000
				Subtotal	$470,000
				Contingency (30%):	$141,000
				TOTAL[1]:	**$611,000**
				Say	**$620,000**

[1] Total is rounded to the nearest thousand.

[2] This estimate is based on a Preliminary Design concept and is subject to change due to design revisions; fluctuations in cost of materials and labor; or unforeseen contingencies. Total does not include soft costs or permits. No contingencies are included for encountering contaminated soils.

APPENDIX A

TECHNICAL MEMORANDUM NO. 1

Infrastructure Engineering Corporation

RAINBOW MUNICIPAL WATER DISTRICT
R.A. Weese Filtration Plant Interconnect

DRAFT TECHNICAL MEMORANDUM

Date: May 30, 2017 – **1st DRAFT**

Subject: **HYDRAULIC EVALUATION – FLOWS, PUMPING ALTERNATIVES, AND USE OF THE DISTRICT'S EXISTING PUMP SKID**

Prepared By: Scott Humphrey, P.E., Rick Kennedy P.E.
Reviewed By: Ross Maxwell, P.E.

EXECUTIVE SUMMARY

In support of the Rainbow Municipal Water District (District), R.A. Weese Filtration Plant Interconnect (WFP) Project (Project), Infrastructure Engineering Corporation (IEC) has:
1.0) utilized the District's *HYDRAULIC MODEL* to determine water system demands during non-summer months that could be supplied or supplemented by implementing the Project;
2.) conducted an *ALTERNATIVE ANALYSIS* to evaluate pumping and gravity flow options; and
3.) evaluated the possibility of the *USE OF THE DISTRICT'S SKID MOUNTED PUMP STATION* as part of the project. A summary of the findings are presented below.

HYDRAULIC MODEL

The District's hydraulic model has been used to assist with determining the demands during winter months that could possibly be supplied or supplemented by implementing the Project. Flows available from the City of Oceanside by month have been estimated, based on a range the City provided, specifically 1.2 mgd to 4.5 mgd over a 6 non-summer month period. Actual values need to be obtained from, and/or negotiated with, the City of Oceanside. It has been assumed that the City of Oceanside's water availability is based on their periods of low demands, which follow a similar pattern to that of the District's. Estimated water availability and District system demands derived from the District's hydraulic model are compared in the following table.

Flows Available from the Weese WFP Versus System Demands		
Month	**Est. Available Weese WFP Flows (mgd)**	**District System Demands (mgd)**
November	2.2	5.1
December	4.3	2.7
January	3.9	3.1
February	4.5	2.5
March	3.2	3.9
April	1.2	6.1

Based on the estimates water from the Weese WTP the City of Oceanside could be offering about 1,483 AF per year, April through November, which is about 80% of the demand in that part of the District's system over the same period. If a differential between Weese WFP treated water and the SDCWA treated water could be negotiated at $50 per AF the savings to the District would be about $74,000 per year. Negotiating a better dollar per AF rate proportionally increases the savings. If gravity flow is employed, due to diurnal flow conditions a reduced amount of water, about 1388 AF of the 1,483 AF can be utilized unless 100 AF can be directed to the Morro Reservoir. The yearly savings, by buying 1,483 AF of water from the City of Oceanside, considering a 5% interest rate, translates to present worth value of about $1.5M.

ALTERNATIVE ANALYSIS

An evaluation of three different alternatives has been performed: Alternative 1 incorporates gravity flow control alone with no pumping, but requires installation of three new altitude/PRV valves; Alternative 2 incorporates gravity flow control and pumping, and also requires installation of three new altitude/PRV valves; and Alternative 3 utilizes pumping and flow control, without gravity flow or the need to install three new altitude/PRV valves. It is recommended that Alternative 3, which includes a pump station followed by a flow control valve, and without the other elements needed to accommodate gravity flow, is the recommended alternative due the following advantages:

- Less cost, at just about 1 million dollars which is $300,000 less than either Alternatives 1 or 2.
- Utilizes the District's skid mounted pump station.
- Approximately 25 customers do not experience a reduction in pressure saving about $120K compared to Alternatives 1 and 2.
- Avoids constructing 3 combination Altitude/PRV valve stations to reduce the HGL in the system to about 975 from a maximum of 1011. This eliminates having to find three other construction locations within District's system at about 970' elevation saving $150K and reduces the number of construction sites from 5 to 2.
- Allows an additional purchase of 102 AF from the Weese WFP, and at $50 per AF savings, results in a value of $5,100 per year.
- System storage tanks have to be filled less often.

USE OF THE DISTRICT'S SKID MOUNTED PUMP STATION

The District requested considering the possibility of utilizing their existing unused skid mounted portable pump station as part of the Project. The concern has been that the skid pumps would, despite the use of a downstream control valve, always operate at a reduced speed and reduced power which could severely affect the efficiency of the VFD's, and that a properly sized constant speed pumps followed by a control valve could provide better overall performance. The evaluation of the District's portable pump station skid shows there are no significant inefficiencies when compared with other constant speed pump arrangements. This is because the skid mounted pump station has six pumps all with VFD's that allows the pumps to run at overall lower

pressures and energy than other constant speed pump arrangements, plus the load on each of the six pump can be maintained at about 50% of the rated 15 HP (lower percent loading can result in significant drops in electrical efficiency) which keeps the efficiency of the VFD's at about 94%. Since the District's portable pump station skid does not result in significant inefficiencies when compared with other pump arrangements its use is recommended.

The above summarizes the findings and recommendations associated with this technical memorandum.

DETAILED ANALYSIS

The initial concept for the project provides for connecting to the City of Oceanside's R. A. Weese Water Filtration plant (Weese WTP) and pumping water into the District's distribution system as a means to obtaining water from a source other than the SDCWA. The Aerial Overview, Figure 1, shows the addition of a pump station on the Weese WFT site, installing about 250 feet of new 16-inch pipe, and connecting into the District's system downstream of the District's Gopher Canyon Tank. A Hydraulic Schematic of the District's overall system is attached for general reference, Figure 2.

The following paragraphs present basic hydraulic information associated with the project followed by three different project alternatives for consideration. The alternatives, one utilizing gravity flow without the addition of a pump station to save on pumping costs, include the following:

- Alternative 1 – Construct a Flow Control Facility Only at the Weese WFP site and add three Altitude/PRV's to maintain a 975 HGL downstream of the Gopher Canyon, Turner, and Hutton Tanks (No Pump Station, as shown schematically in Figure 3)
- Alternative 2 – Construct a Pump Station with Flow Control on the Weese WFP Site and add three Altitude/PRV's to maintain a 975 HGL downstream of the Gopher Canyon, Turner and Hutton Tanks as shown schematically in Figure 4.
- Alternative 3 - Construct a Pump Station followed by Flow Control without Altitude/PRV's on the Weese WFP Site as shown schematically in Figure 5.

Advantages and disadvantages and planning level costs, including present value for some reoccurring annual costs will be presented after a discussion on hydraulic modeling results and potential amounts of water from the City of Oceanside. The District possesses a skid mounted portable pump station that could potentially be utilized as part of this project.

An evaluation of appropriateness of using the skid mounted pump station follows the alternative analysis.

HYDRAULIC MODEL RESULTS AND EVALUATION

1. Max Average Day Flowrate – 4.5 mgd per Sherry Kirkpatrick's discussion with Robert Guitirrez, Water Utilities Manager of the City of Oceanside, during non-summer months of November through April.

2. Min Average Day Flowrate – 1.2 mgd per Sherry's discussion with Robert.

3. To accommodate Alternatives 1 and 2 the District's System HGL has to be reduced to 975. This will have the effect of reducing pressures of about 24 customers to 40 psi or less. See the attached Low Pressure Nodes pressure map, Figure 6.

4. Flows available by month have been estimated. Actual values need to be obtained from, and/or negotiated with, the City of Oceanside. It has been assumed that the City of Oceanside's water availability is based on periods of low demands which follow a similar pattern to that of the District's. Estimated water availability and District's system demands derived from the District's hydraulic model are compared in the following table.

Flows Available from the Weese WFP Versus System Demands		
Month	**Est. Available Weese WFP Flows (mgd)**	**District System Demands (mgd)**
November	2.2	5.1
December	4.3	2.7
January	3.9	3.1
February	4.5	2.5
March	3.2	3.9
April	1.2	6.1

5. Based on the above estimates the City of Oceanside would be offering about 1,483 AF per year, November through April, which is about 80% of the demand in that part of the District's system over the same period. If a differential between Weese WFP treated water and the SDCWA treated water could be negotiated at $50 per AF the savings to the District would be about $ 74,000 per year. Negotiating a better dollar per AF rate proportionally increases the savings. If gravity flow is employed, due to diurnal flow conditions a reduced amount of water, about 1388 AF of the 1,483 AF can be utilized unless 100 AF can be directed to the Morro Reservoir. The yearly savings, by buying 1,483 AF of water from the City of Oceanside, considering a 5% interest rate, translates in to present worth value of about $1.5M.

6. To maximize water from the Weese WFP the District may consider:

   a. Negotiating higher volumes than in the table above especially in November, March and April.
   b. Using an interconnection between Hutton and Pala Mesa to take addition water during the winter months.
   c. Managing Morro reservoir to assist with the storage of water from the Weese WFP.
   d. Negotiate flexibility in taking water from the Weese WFP on rainy days or other low demand days.

ALTERNATIVE ANALYSIS

Alternative 1 – Construct Flow Control Facility Only at the Weese WFP site and add Three Altitude/PRV's to Maintain a 975 HGL from the Gopher Canyon, Turner and Hutton Tanks (No Pump Station)

Figure 3 depicts the basic equipment, flow configuration, and hydraulic grades associated with this alternative.

Disadvantages of Alternative 1

1. 24 customers have pressures 40 psig or less. Estimated cost for point of service equipment to satisfy customer's needs is $5,000 each for a total of $120K.

2. Purchase about 102 acre feet per year for the SDCWA that could have otherwise been purchased from Oceanside. At an assumed differential of $50 per AF this is a cost of or $5,100.

3. System storage tanks have to be filled more often.

4. Must construct 3 combination Altitude/PRV valve stations to reduce the HGL in the system to about 975 from a maximum of 1011. This potentially poses a problem since three locations at an elevation of about 970 have to be identified for the construction. Estimated cost of each station is $50K for a total of $150K.

5. Does not utilize the District's skid mounted pumps station.

Advantages of Alternative 1

1. Limits the construction at the Weese site to a flow control facitlity, foregoing the cost of the pump station, with an estimated saving of $100K.

2. Simplest Control.

3. No pumping costs, saving about $1,000 per year.

Cost of Alternative 1

Estimated cost to construct – $1.3 M (Refer to the Weese Interconnect Planning Estimate in Appendix A for more detail.)

Alternative 2 – Construct a Pump Station with Flow Control and three Altitude/PRV's to maintain a 975 HGL from the Gopher Canyon, Turner and Hutton Tanks

Figure 4 attached depicts the basic equipment, flow configuration, and hydraulic grades associated with this alternative.

Disadvantages of Alternative 2

1. 24 customers having pressures 40 psig or less. Estimated cost of $120K to satisfy these customers.

2. Most complicated control.

3. Pump station and flow control must be constructed on the Weese WFP site at an additional cost of $100K

4. Must construct 3 combination Altitude/PRV valve stations to reduce the HGL in the system to about 975 from a maximum of 1011. This potentially poses a problem since three locations at an elevation of about 970 have to be identified for the construction. Estimated cost of each station is $50K for a total of $150K

5. Adds pumping costs of about $1,000 per year.

Advantages of Alternative 2

1. Utilizes the District's skid mounted pump station.

2. Controls of the skid mounted pump station remain pressure based.

3. Allows gravity feed except when pumping is necessary keeping pumping cost to about $1,000 per year.

4. System storage tanks have to be filled less often

5. Allows an additional purchase of 102 AF from the Weese WFP, and at $50 per AF savings, results in a value of 5,100 per year.

Cost of Alternative 2

Estimated cost to construct – $1.3 M (Refer to the Weese Interconnect Planning Estimate in Appendix A for more detail.)

Alternative 3 – Construct Pump Station Only on Weese WFP Site

Figure 5 depicts the basic equipment, flow configuration, and hydraulic grades associated with this alternative.

Disadvantages of Alternative 3

1. All flow from the Weese WFP is pumped at a cost of $ 14,000 per year.
2. Does not allow for gravity feed. Could otherwise reduce pumping costs to about $1,000 per year.
3. Requires controls and programing for flow control and pressure controls.

Advantages of Alternative 3

1. Utilizes the District's skid mounted pump station.
2. Customers do not experience a reduction in pressure saving about $120K compared to Alternatives 1 and 2.
3. Less complicated control than Alternative 2.
4. Avoids constructing 3 combination Altitude/PRV valve stations to reduce the HGL in the system to about 975 from a maximum of 1011. This eliminates having to find construction locations within District's system at about 970' elevation saving $150K and reduces the number of construction sites from 5 to 2.
5. Allows an additional purchase of 102 AF from the Weese WFP, and at $50 per AF savings, results in a value of $5,100 per year.
6. System storage tanks have to be filled less often.

Cost of Alternative 3

Estimated cost to construct – $0.97 M (Refer to the Weese Interconnect Planning Estimate in Appendix A for more detail.)

Alternative Analysis Recommendation

Alternative 3 is recommended due to less cost, at just about 1 million dollars which is $300,000 less than either Alternatives 1 or 2. The other advantages as expressed in the details of this alternative evaluation above include:

- Utilizes the District's skid mounted pump station.
- Customers do not experience a reduction in pressure saving about $120K compared to Alternatives 1 and 2.
- Avoids constructing 3 combination Altitude/PRV valve stations to reduce the HGL in the system to about 975 from a maximum of 1011. This avoids having to find two other construction locations within District's system at about 970' elevation saving $150K and reduces the number of construction sites from 5 to 2.
- Allows an additional purchase of 102 AF from the Weese WFP, and at $50 per AF savings, results in a value of $5,100 per year.
- System storage tanks have to be filled less often.

USE OF THE DISTRICT'S SKID MOUNTED PUMP STATION

The alternative analysis above assumed that the District's skid mounted pump station could be used, but warrants further evaluation. Looking at the Skid Pump VFD's Envelopes, Figure 7, overlaid on the system operational band, it is clear the pumps are not a perfect fit. To use the skid mounted pump station a way of increasing the head on the pumps will be necessary to gain operational pump efficiency. To accomplish this both Alternatives 2 and 3 assume an arrangement where the pumps on District's pump skid control to a discharge pressure setpoint followed by a flow control valve. The concern has been that in the proposed service the pumps would, despite the use of a downstream control valve, always operate a reduced speed and reduced power which could severely affect the efficiency of the VFD's, and that properly size constant speed pumps follow by a control valve would provide better overall performance. Further research shows that the District's portable pump station skid does not result in significant inefficiencies when compared with other pump arrangements. The skid mounted pump station has six pumps all with VFD's that allows the pumps to run at overall lower pressures and energy than other constant speed pump arrangements, plus the load on each of the six pump can be maintained at about 50% of the rated 15 HP (lower percent loading can result in significant drops in electrical efficiency) which keeps the efficiency of the VFD's at about 94%. If the District's pump skid was not a consideration a 2 duty-1 standby, or a 3 duty -1 standby, constant speed pump arrangement followed by flow control would likely be the recommendation.

The two tables below show the estimated kilowatt use per mgd, one for the Districts pump skid, and one for a two constant speed pump arrangement (there would of course be a third standby pump).

District's Pump Skid VFD's - Maintains 40 Feet of Discharge Head							
MGD	**1.2**	**1.75**	**2.3**	**2.85**	**3.4**	**3.95**	**4.5**
gpm	**833**	**1215**	**1597**	**1979**	**2361**	**2743**	**3125**
No. of Pumps	2	3	3	4	5	6	6
gpm each	417	405	532	495	472	457	521
Est. Eff	0.6	0.6	0.6	0.6	0.6	0.6	0.6
HP	14	20	27	33	40	46	53
HP Each	7	7	9	8	8	8	9
% of 15 HP Rating	47%	45%	60%	56%	53%	51%	58%
VFD Eff	0.94	0.93	0.94	0.94	0.94	0.94	0.95
Power KW	**9.8**	**14.2**	**18.9**	**23.4**	**27.9**	**32.4**	**37.3**

Two Constant Speed Pump Arrangement - Cornell Model 5WBHVA							
MGD	**1.2**	**1.75**	**2.3**	**2.85**	**3.4**	**3.95**	**4.5**
gpm	**833**	**1215**	**1597**	**1979**	**2361**	**2743**	**3125**
Head in Feet	70	60	42	66	60	54	45
No. of Pumps	1	1	1	2	2	2	2
gpm each	833	1215	1597	990	1181	1372	1563
Est. Eff	0.75	0.81	0.76	0.8	0.81	0.81	0.78
HP	20	23	22	41	44	46	46
HP Each	20	23	22	21	22	23	23
Power KW	**14.65**	**16.96**	**16.63**	**30.76**	**32.95**	**34.46**	**33.97**

Note that at certain flow rates the power usage is less for the Pump Skid and at other flowrates power usage is less for the Two Pump system arrangement.

This comparison shows that the District's pump skid is a good overall choice and performs at least as well as the two constant speed pump arrangement and its use is recommended for this project. (It has to be noted that the District's pump skid will require control programming changes to work properly under the specific conditions of the project.)

NOTES OF INTEREST AND ASSUMPTIONS OF THE DRAFT MEMORANDUM

1. Since flow monitoring from the Weese WFP is associated with billing, both the District and City of Oceanside need to agree on the meter type to be used.

2. Costing assumed that major piping changes to the District's skid mounted pump station were not required.

3. District to verify the reasonableness of the $50/AF savings that has been assumed.

4. What are the anticipated electrical Time-of-Use rates for the District? This could affect the alternative analysis.

5. The costs associated with the above alternative analysis have assumed the pump station and any flow control valves would be out-doors and not in a building. This should be discussed.

FIGURES

BASIC ELEMENTS OF THE R.A. WEESE WFP INTERCONNECT PROJECT FIGURE 1

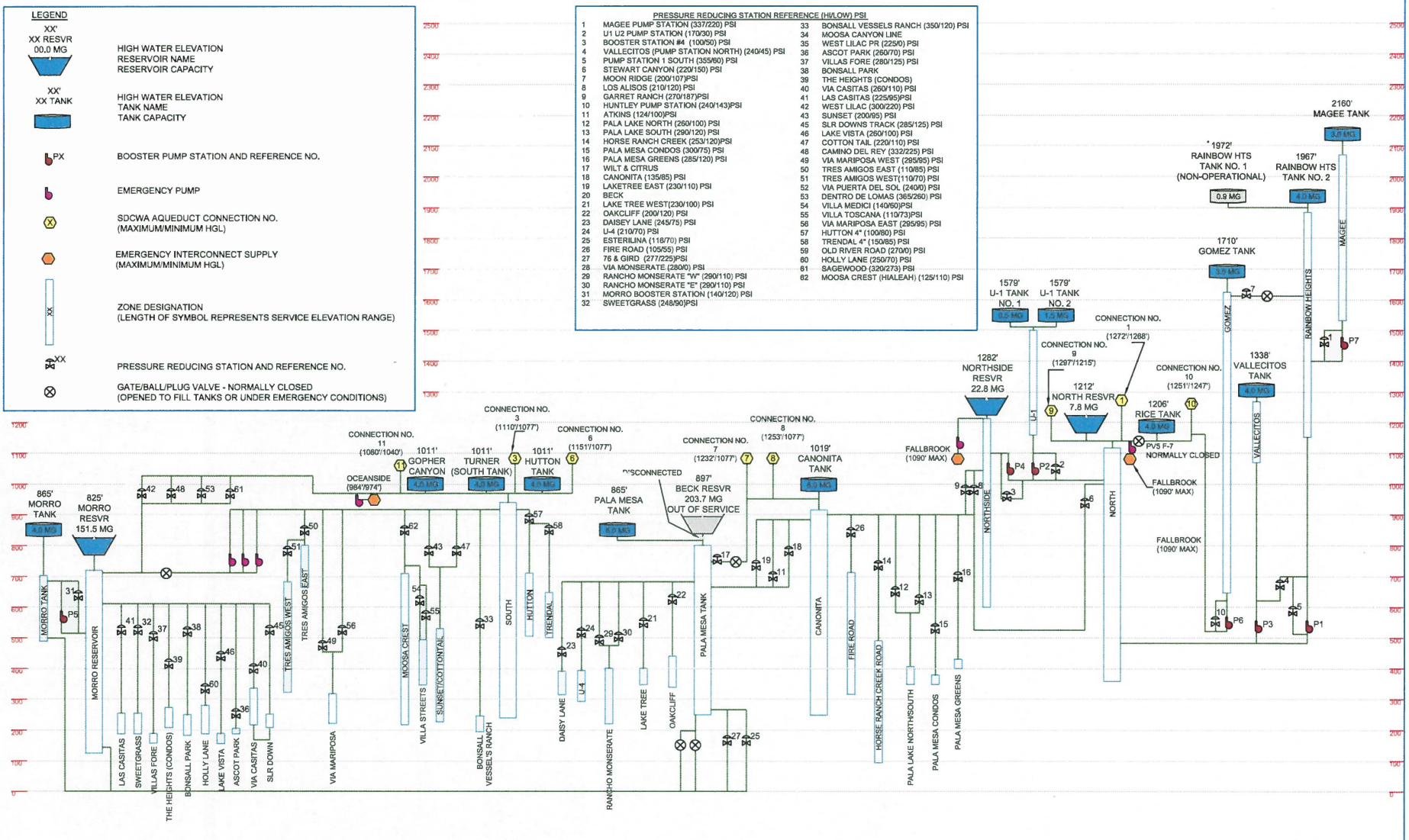

RAINBOW MUNICIPAL WATER DISTRICT
Committed to Excellence

EXISTING SYSTEM HYDRAULIC SCHEMATIC
FIGURE 2

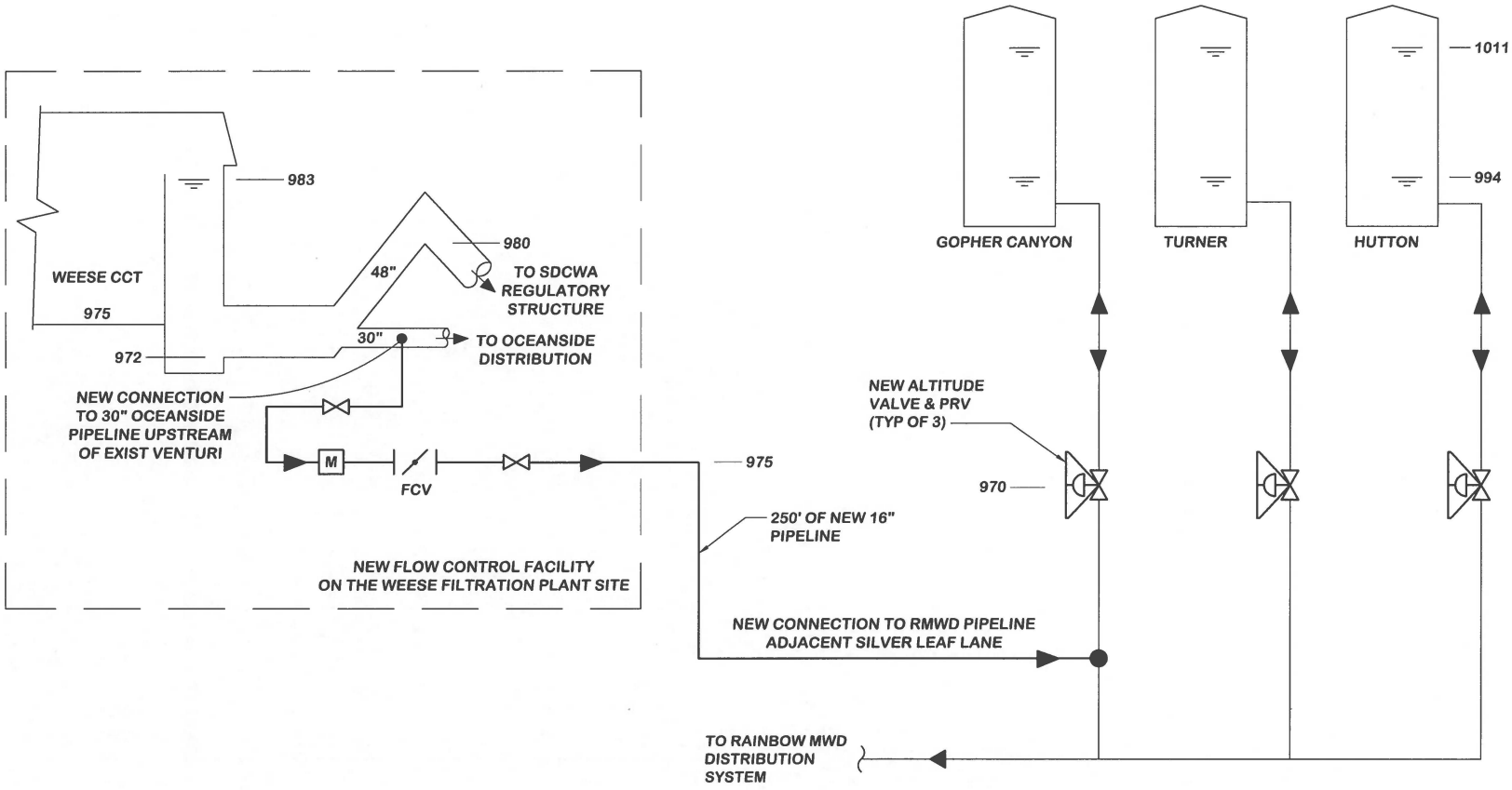

ALTERNATIVE 1
NEW FLOW CONTROL FACILITY AND THREE COMBINATION ALTITUDE / PRVs

FIGURE 3

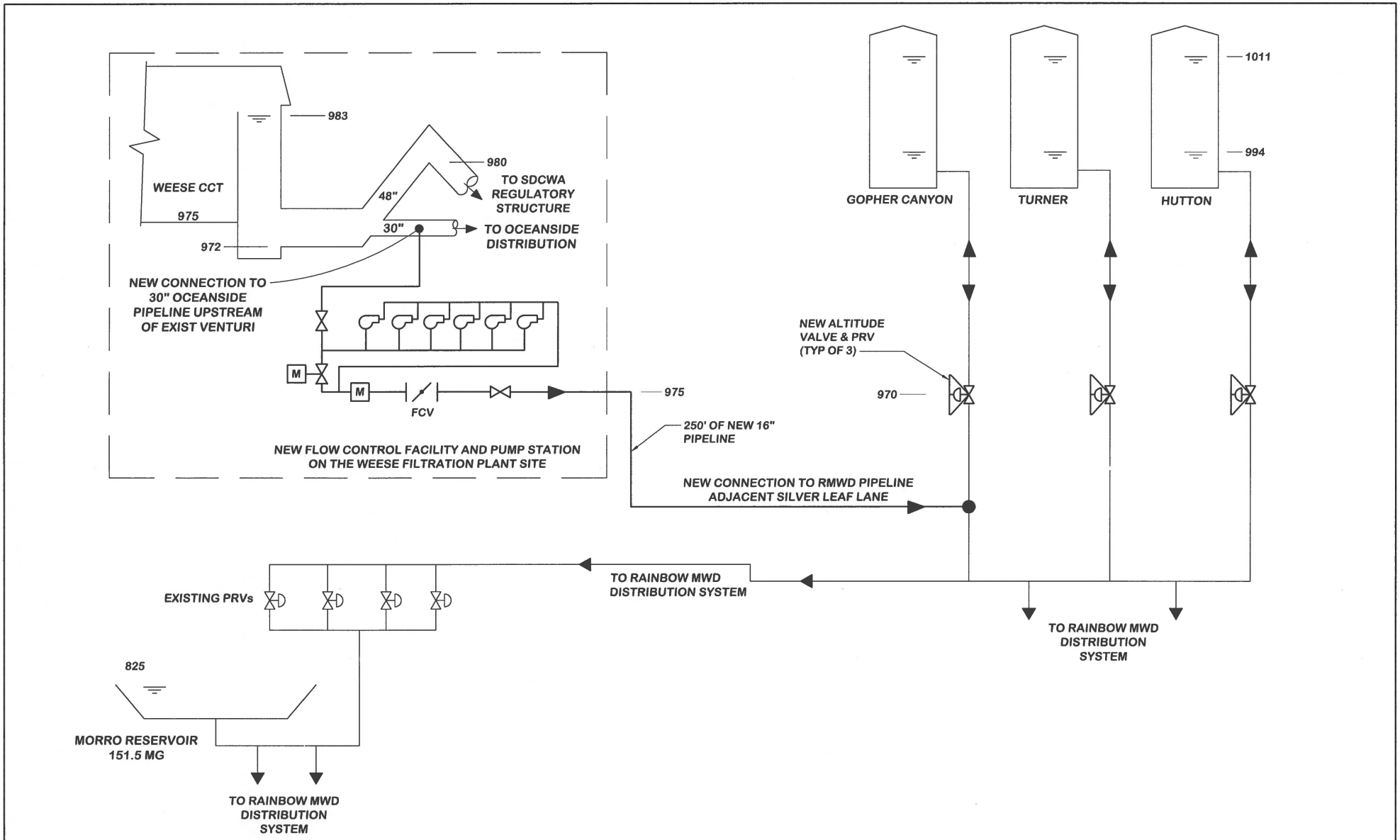

ALTERNATIVE 2
PUMP STATION WITH FLOW CONTROL FACILITY AND THREE COMBINATION ALTITUDE / PRVs

FIGURE 4

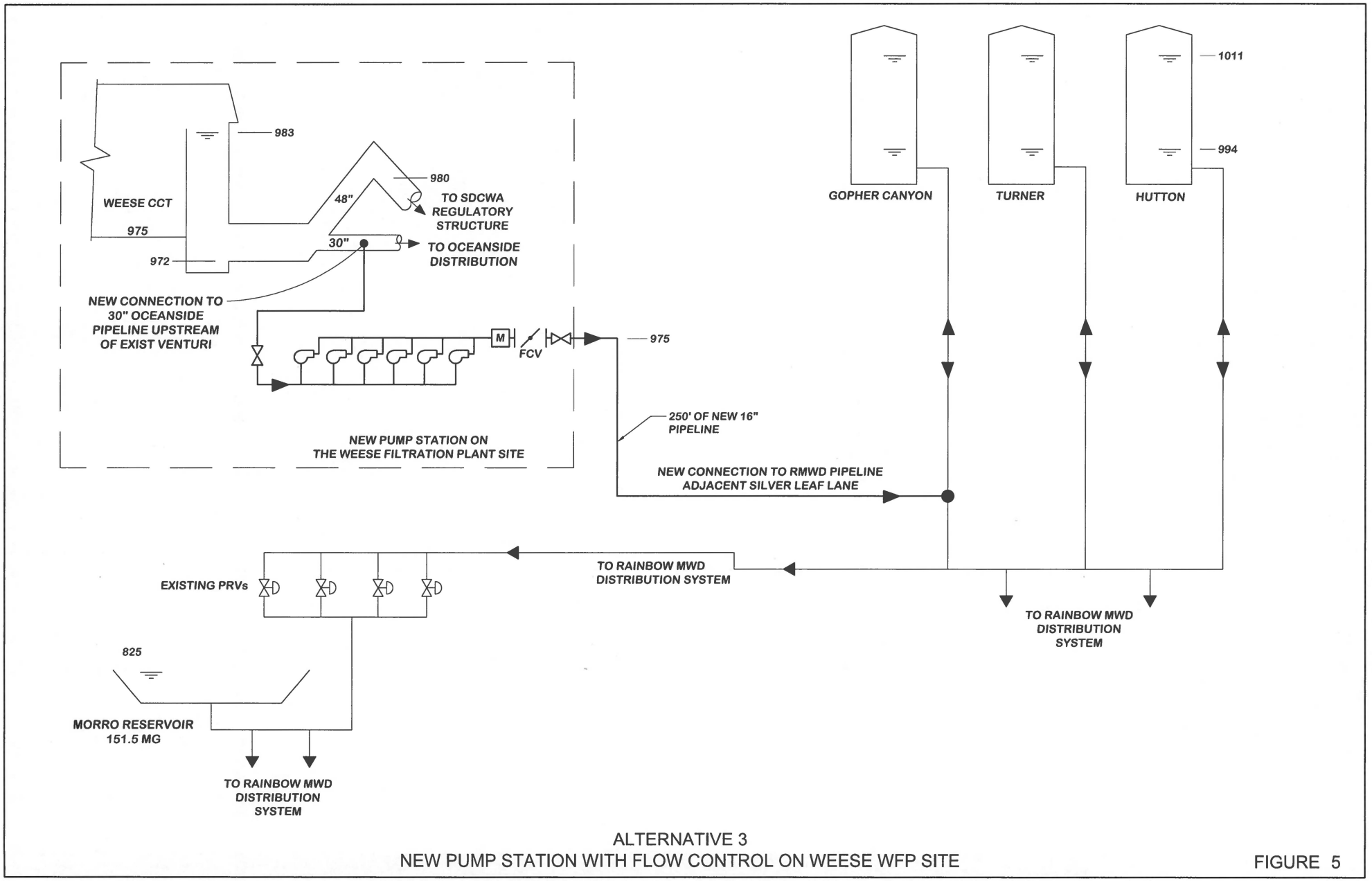

ALTERNATIVE 3
NEW PUMP STATION WITH FLOW CONTROL ON WEESE WFP SITE

FIGURE 5

Legend
Junction Nodes
Pressure
<10 psi
<20 psi
<30 psi
<40 psi
LOW PRESSURE NODES
FIGURE
N

RAINBOW MUNICIPAL WATER DISTRICT
WEESE INTERCONNECT PROJECT

EVALUATION OF MOTH-BALLED
SKID PUMP ASSEMBLY

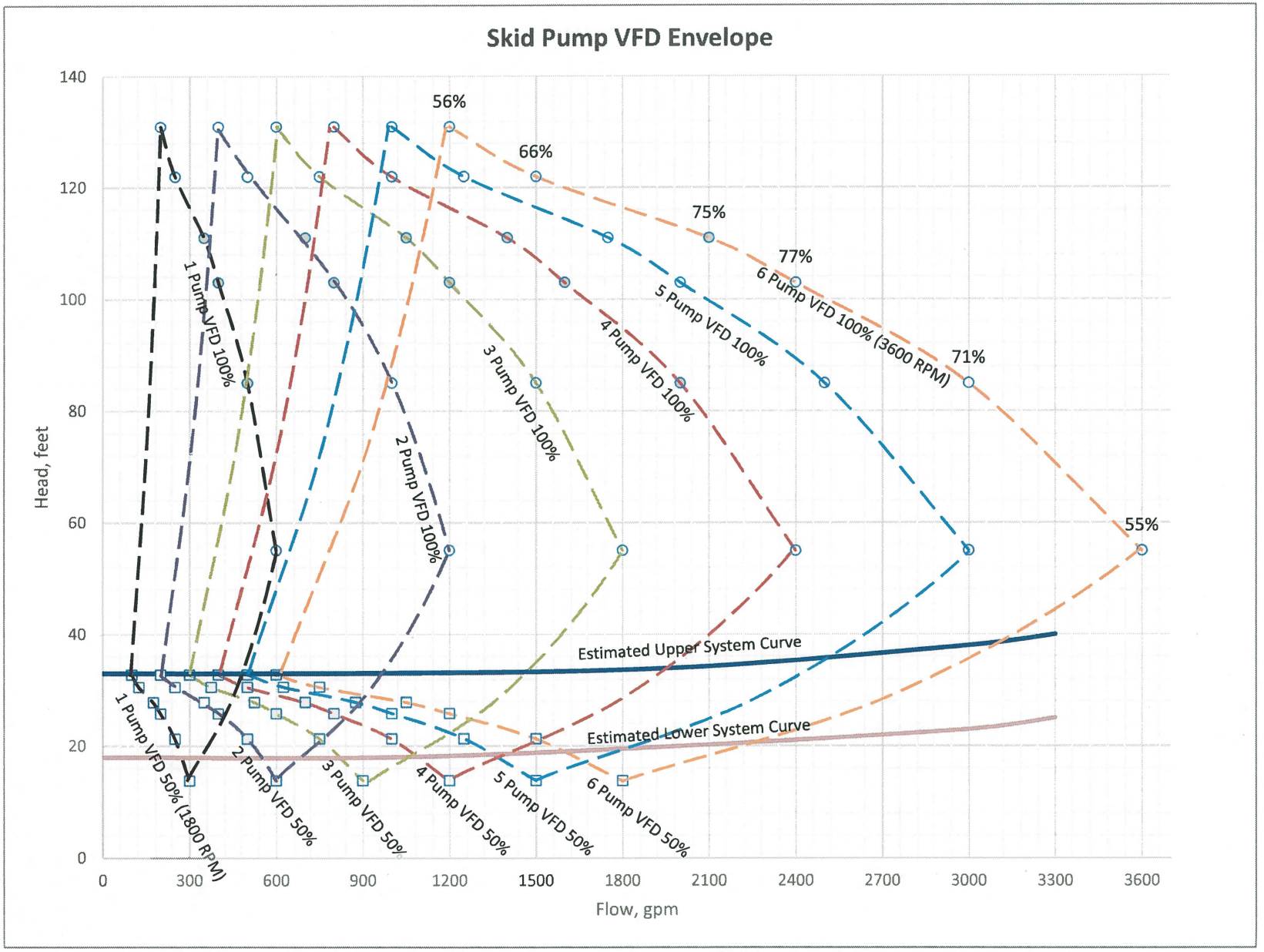

FIGURE 7

APPENDIX A

RAINBOW MUNICIPAL WATER DISTRICT
R. A. Weese WFP Interconnect Project
Planning Level Construction Estimate

	Summary	
Item	**Description**	**Cost**
1	Alternative 1	$1,319,000
2	Alternative 2	$1,300,000
3	Alternative 3	$974,400

RAINBOW MUNICIPAL WATER DISTRICT
R. A. Weese WFP Interconnect Project
Planning Level Construction Estimate
Alternative 1

Item	Article	Quantity	Unit	Unit Price	Extension
1	Mobilization, Insurance, Permits Bonds, and Demob.	1	LS	63,000	$63,000
2	Excavation and Support System	1	LS	$20,000	$20,000
3	Traffic Control	1	LS	$4,000	$4,000
4	Temporary Erosion Control and BMPs	1	LS	$8,000	$8,000
5	Utility Potholing	1	LS	$3,000	$3,000
6	Modify District's Pump Skid and Install	1	EA	$120,000	$120,000
7	Flow Control Facility	1	LS	$150,000	$150,000
8	16" PVC Pipe	250	LF	$400	$100,000
9	Combination Altitude/PRV Stations	3	EA	$50,000	$150,000
10	Structural Slab and Retaining Wall	1	LS	$23,000	$23,000
11	Electrical	1	LS	$80,000	$80,000
12	Customer Low Pressure Solution	24	EA	$5,000	$120,000
13	Purchase of Additional SDCWA Water versus Weese (PV)	102	AF	$50	$101,000
				SUBTOTAL:	$942,000
				40% CONTINGENCY:	$376,800
				TOTAL CONSTRUCTION:	**$1,319,000**

Notes:

1. Total cost is rounded to the nearest $1,000 and is subject to revision for quantities, fluctuations in material or labor costs and unforeseen contingencies.
2. Costs for District plan review and/or permits are not included.
3. Costs for planning, design, construction management, inspection, environmental compliance or mitigation, or ROW/easement acquisition are not included.
4. Pipe costs include appurtenances and paving.
5. PV indicates a present value calculation in the Extention column.

RAINBOW MUNICIPAL WATER DISTRICT
R. A. Weese WFP Interconnect Project
Planning Level Construction Estimate
Alternative 2

Item	Article	Quantity	Unit	Unit Price	Extension
1	Mobilization, Insurance, Permits Bonds, and Demob.	1	LS	63,000	$63,000
2	Excavation and Support System	1	LS	$20,000	$20,000
3	Traffic Control	1	LS	$4,000	$4,000
4	Temporary Erosion Control and BMPs	1	LS	$8,000	$8,000
5	Utility Potholing	1	LS	$3,000	$3,000
6	Modify District's Pump Skid and Install	1	EA	$120,000	$120,000
7	Flow Control Facility	1	LS	$150,000	$150,000
8	Modify District's Pump Station Skid and Install	1	LS	$50,000	$50,000
9	16" PVC Pipe	250	LF	$400	$100,000
10	Combination Altitude/PRV Stations	3	EA	$50,000	$150,000
11	Structural Slab and Retaining Wall	1	LS	$30,000	$30,000
12	Electrical	1	LS	$90,000	$90,000
13	Customer Low Pressure Solution	24	EA	$5,000	$120,000
14	Pumping Cost (PV)	1	LS	$1,000	$19,900
				SUBTOTAL:	$927,900
				40% CONTINGENCY:	$371,160
				TOTAL CONSTRUCTION:	**$1,300,000**

Notes:

1. Total cost is rounded to the nearest $1,000 and is subject to revision for quantities, fluctuations in material or labor costs and unforeseen contingencies.
2. Costs for District plan review and/or permits are not included.
3. Costs for planning, design, construction management, inspection, environmental compliance or mitigation, or ROW/easement
4. Pipe costs include appurtenances and paving.
5. PV indicates a present value calculation in the Extention column.

RAINBOW MUNICIPAL WATER DISTRICT
R. A. Weese WFP Interconnect Project
Planning Level Construction Estimate
Alternative 3

Item	Article	Quantity	Unit	Unit Price	Extension
1	Mobilization, Insurance, Permits Bonds, and Demob.	1	LS	50,000	$50,000
2	Excavation and Support System	1	LS	$20,000	$20,000
3	Traffic Control	1	LS	$4,000	$4,000
4	Temporary Erosion Control and BMPs	1	LS	$8,000	$8,000
5	Utility Potholing	1	LS	$3,000	$3,000
6	Modify District's Pump Skid and Install	1	LS	$120,000	$120,000
7	16" PVC Pipe	250	LF	$400	$100,000
8	Structural Slab and Retaining Wall	1	LS	$23,000	$23,000
9	Electrical	1	LS	$90,000	$90,000
10	Pumping Cost (PV)	1	LS	$14,000	$278,000
				SUBTOTAL:	$696,000
				40% CONTINGENCY:	$278,400
				TOTAL CONSTRUCTION:	**$974,400**

Notes:

1. Total cost is rounded to the nearest $1,000 and is subject to revision for quantities, fluctuations in material or labor costs and unforeseen contingencies.
2. Costs for Agency plan review and/or permits are not included.
3. Costs for planning, design, construction management, inspection, environmental compliance or mitigation, or ROW/easement acquisition are not included.
4. Pipe costs include appurtenances and paving.
5. PV indicates a present value calculation in the Extention column.

APPENDIX B

ENGINEER'S OPINION OF PROBABLE CONSTRUCTION COSTS

RAINBOW MUNICIPAL WATER DISTRICT
R.A. Weese Filtration Plant Interconnect Project
Pump Station Alternative 1
Engineer's Opinion of Probable Construction Cost[2] - Basis of Design Memorandum
July 2017

Item	Qty.	Unit	Article	Unit Price	Total Price
1	22	YD	Concrete Slab	$600	$14,000
2	24	YD	Retaining Wall	$1,100	$27,000
3	143	YD	Excavation & Export	$90	$13,000
4	1	LS	Remove from trailer and install on slab	$10,000	$10,000
5	375	SF	Metal Building with Elect and Ventilation	$80	$30,000
6	1	LS	PLC Programming	$20,000	$20,000
7	1	LS	10 "Mag meter	$10,000	$10,000
8	1	LS	12 & 10" Meter piping	$20,000	$20,000
9	1	LS	Coating	$5,000	$5,000

Subtotal	$149,000
Contingency (30%):	$45,000
TOTAL[1]:	$194,000
SAY	**$200,000**

[1] Total is rounded to the nearest thousand.

[2] This estimate is based on the Preliminary Engineering and is subject to change due to design revisions; fluctuations in cost of materials and labor; or unforeseen contingencies. Total does not include soft costs or permits. No contingencies are included for encountering contaminated soils.

RAINBOW MUNICIPAL WATER DISTRICT
R.A. Weese Filtration Plant Interconnect Project
Pump Station Alternative 2
Engineer's Opinion of Probable Construction Cost[2] - Basis of Design Memorandum
July 2017

Item	Qty.	Unit	Article	Unit Price	Total Price
1	1	LS	EFI Repackaged Station	$320,000	$320,000
1	35	YD	Concrete Slab	$600	$21,000
2	34	YD	Retaining Wall	$1,100	$38,000
3	429	YD	Excavation & Export	$90	$39,000
4	1	LS	Remove from trailer and install on slab	$10,000	$10,000

Subtotal	$430,000
Contingency (30%):	$130,000
TOTAL[1]:	**$560,000**
SAY	**$570,000**

[1] Total is rounded to the nearest thousand.

[2] This estimate is based on a Preliminary Design and is subject to change due to design revisions; fluctuations in cost of materials and labor; or unforeseen contingencies. Total does not include soft costs or permits. No contingencies are included for encountering contaminated soils.

RAINBOW MUNICIPAL WATER DISTRICT
R.A. Weese Filtration Plant Interconnect Project
Pump Station Alternative 3
Engineer's Opinion of Probable Construction Cost[2] - Basis of Design Memorandum
July 2017

Item	Qty.	Unit	Article	Unit Price	Total Price
1	1	LS	EFI Repackaged Station	$250,000	$250,000
1	35	YD	Concrete Slab	$600	$21,000
2	34	YD	Retaining Wall	$1,100	$38,000
3	429	YD	Excavation & Export	$90	$39,000
4	1	LS	Remove from trailer and install on slab	$10,000	$10,000

Subtotal	$358,000
Contingency (30%):	$108,000
TOTAL[1]:	**$466,000**
SAY	**$480,000**

[1] Total is rounded to the nearest thousand.

[2] This estimate is based on a Preliminary Design and is subject to change due to design revisions; fluctuations in cost of materials and labor; or unforeseen contingencies. Total does not include soft costs or permits. No contingencies are included for encountering contaminated soils.

APPENDIX C

PUMP INFORMATION FOR CORNELL PUMPS

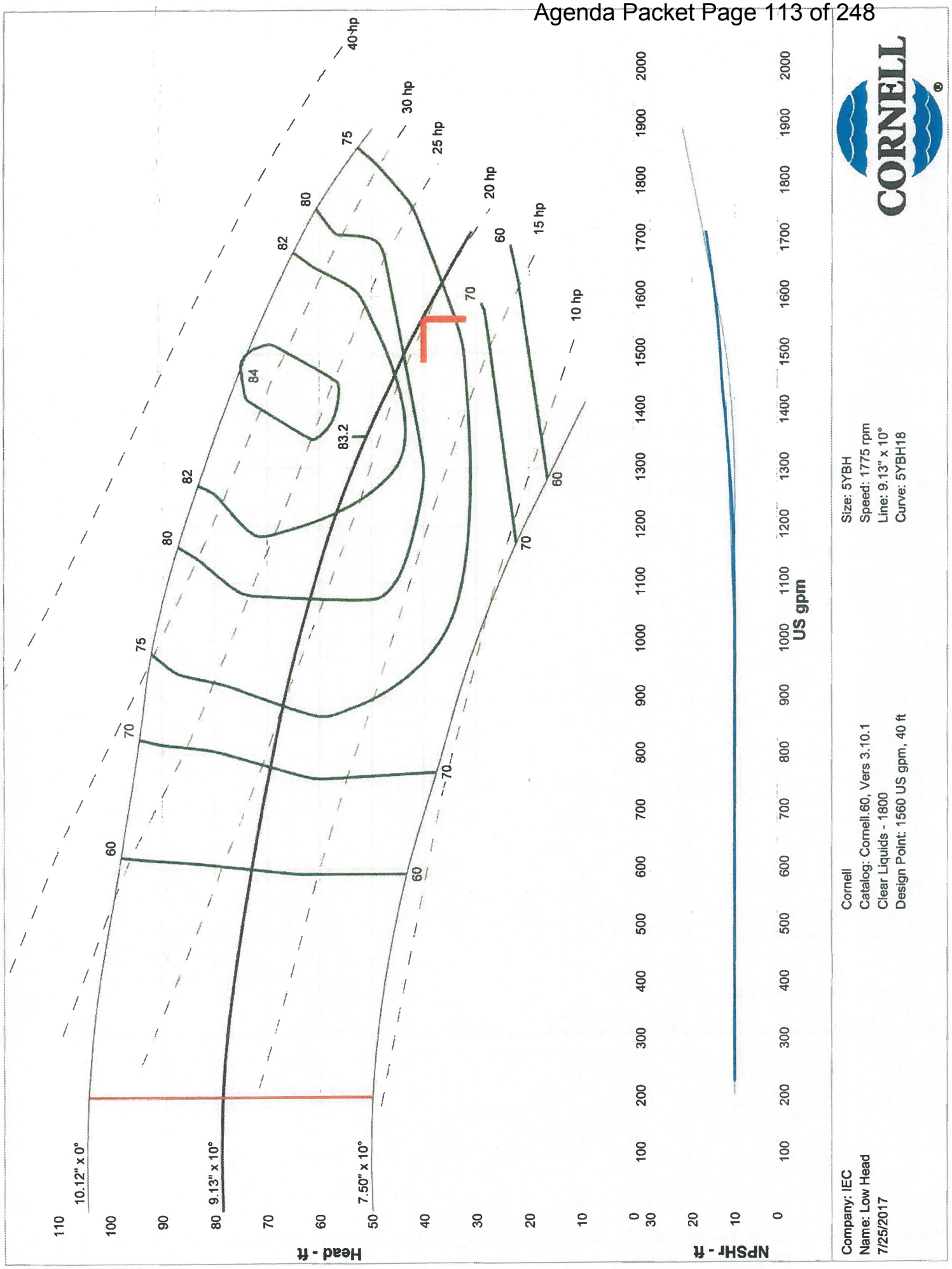
40 hp
30 hp
25 hp
20 hp
15 hp
10 hp
10.12" x 0°
9.13" x 10°
7.50" x 10°
83.2
Head - ft
NPSHr - ft
US gpm
CORNELL
Company: IEC
Name: Low Head
7/25/2017
Cornell
Catalog: Cornell.60, Vers 3.10.1
Clear Liquids - 1800
Design Point: 1560 US gpm, 40 ft
Size: 5YBH
Speed: 1775 rpm
Line: 9.13" x 10°
Curve: 5YBH18

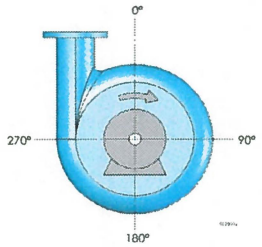

NOTES:

Discharge positions are viewed from the drive end. Standard increments of discharge position are shown in the chart below (DISCH INCR). Consult factory for other discharge positions.

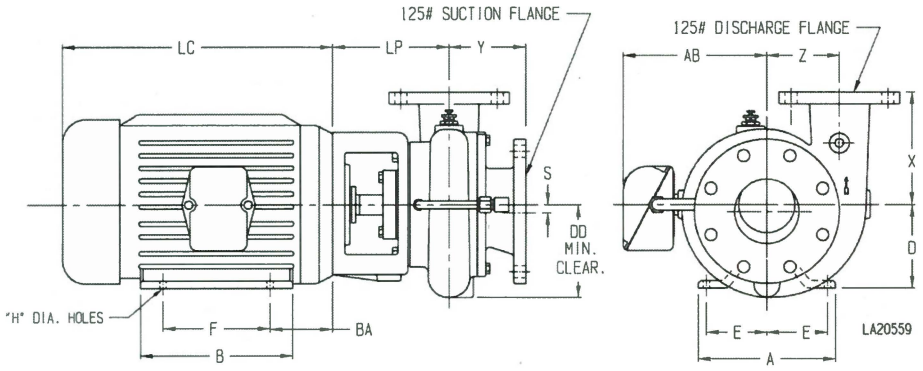

NOTES:

1. Motor dimensions are for ODP motors and may vary depending on models and manufacturer.
2. Flange connection dimension can vary ± .12 inch.
3. Do not use for construction unless certified.

(c) For 326 and larger motor frame.
(d) For 404 and larger motor frame.

PUMP DIMENSIONS										
MODEL	CONNECTION DISCH.	CONNECTION SUCT.	DISCH. INCR.	AK DIM.	DD	S	X	Y	Z	LP
2.5YH	2.5	4	90°	8.5	7	-	7.5	5.38	5.75	7.44
				12.5	7	-	7.5	5.38	5.75	7.44
3YH	3	4	90°	8.5	7.39	-	7	5.38	6.5	7.44
				12.5	7.39	-	7	5.38	6.5	7.44
4YB	4	6	90°	8.5	9.12	0.69	8.75	6.09	6.12	8.13
				12.5	9.12	0.69	8.75	6.09	6.12	8.13
				12.5	9.12	0.69	8.75	6.09	6.12	10.38 (d)
5YB	5	8	90°	8.5	11.62	1.38	10.5	9	7.5	8.62
				12.5	11.62	1.38	10.5	9	7.5	10.88
5YBH	5	8	90°	8.5	13.12	0.44	8	10.31	9	8.97
				12.5	13.12	0.44	8	10.31	9	8.97
6YB	6	10	90°	12.5	14.75	1	9.5	10.41	9.5	11.68
10YB	10	10	90°	12.5	18.25	-	11	10.7	12.5	11.75

MOTOR DIMENSION										
MOTOR FRAME	AK DIM.	A	B	D	E	F	H	AB	BA	LC
143-5	4.5	6.5	5.94	3.5	2.75	5	0.34	5.62	2.88	10
182-3	4.5	8.62	6.5	4.5	3.75	5.5	0.41	6.75	3.5	12.25
	8.5	8.62	6.5	4.5	3.75	5.5	0.41	6.75	3.5	12.25
213-5	8.5	9.5	8	5.25	4.25	7	0.41	7.94	4.5	13.69
254-6	8.5	11.25	11.25	6.25	5	10	0.53	9.5	5	17.94
284-6	12.5	12.25	12.25	7	5.5	11	0.53	11.37	5	21.31
324-6	12.5	14.25	13.75	8	6.25	12	0.66	12.22	5.5	22.19
364-5	12.5	15.75	14	9	7	12.25	0.66	13.2	6.12	24.31
404-5	12.5	18.5	16.62	10	8	13.75	0.81	16.39	6.88	29.97

10/28/08

CORNELL

CORNELL PUMP COMPANY

Y-SERIES CLOSE-COUPLED PUMPS
WITH TANGENTIAL VOLUTE

DIM2082

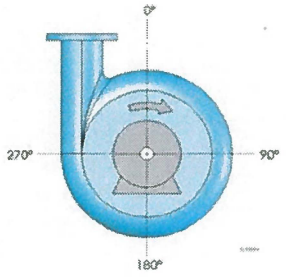

NOTES:

Discharge positions are viewed from the drive end. Standard increments of discharge position are shown in the chart below (DISCH INCR). Consult factory for other discharge positions.

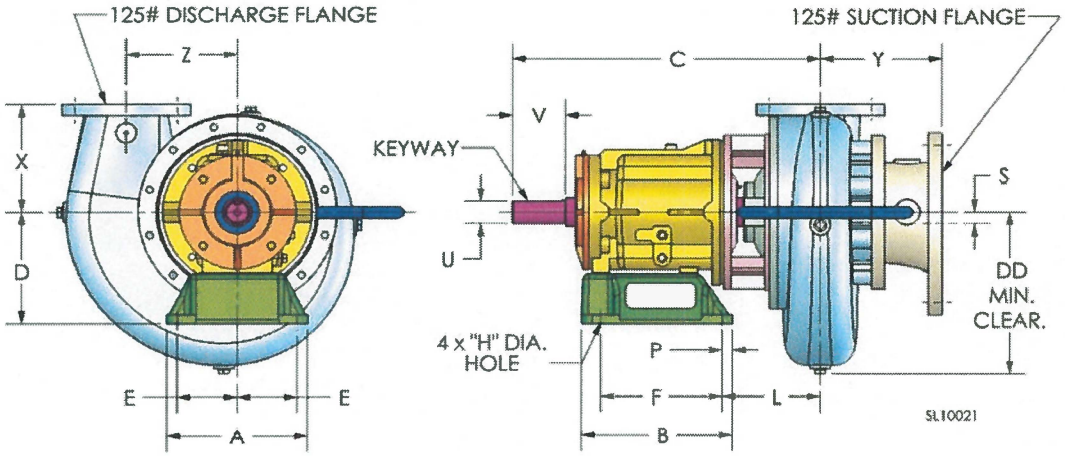

NOTES:

1. "V" Dimension is maximum useable shaft.
2. Frame mounting foot thickness is .75".
3. Flange connection dimension can vary ± .12 inch.
4. Do not use for construction unless certified.

PUMP DIMENSIONS																					
MODEL	FRAME	CONNECTION DISCH.	CONNECTION SUCT.	DISCH. INCR.	A	B	C	D	DD	E	F	H	L	P	S	U	V	X	Y	Z	KEYWAY
4YB	F16	4	6	90°	12	12.88	28.38	9.75	9	5.12	10.38	0.81	10.53	0.88	0.69	2	4.5	8.75	6.09	6.12	.50X.25
5YB	F16	5	8	90°	12	12.88	28.88	9.75	11.62	5.12	10.38	0.81	11.03	0.88	1.38	2	4.5	10.5	9	7.5	.50X.25
5YBH	F16	5	8	90°	12	12.88	26.97	9.75	13.12	5.12	10.38	0.81	9.12	0.88	0.44	2	4.5	8	10.31	9	.50X.25
6YB	F16	6	10	90°	12	12.88	29.69	9.75	14.75	5.12	10.38	0.81	11.81	0.88	1	2	4.5	9.5	10.41	9.5	.50X.25
6YB-S	F16	6	10	90°	12	12.88	26.26	9.75	14.75	5.12	10.38	0.81	8.38	0.88	1	2	4.5	9.5	10.41	9.5	.50X.25

10/15/08

CORNELL

CORNELL PUMP COMPANY

Y-SERIES HORIZONTAL F16 FRAME MOUNTED PUMPS WITH TANGENTIAL VOLUTE

DIM2059

RAINBOW MUNICIPAL WATER DISTRICT
Committed to Excellence

BOARD ACTION

BOARD OF DIRECTORS

August 22, 2017

SUBJECT

DISCUSSION AND POSSIBLE ACTION TO ADOPT ORDINANCE NO. 17-10 AMENDING AND UPDATING ADMINISTRATIVE CODE CHAPTER 9.05 – SEWER PERMITS

BACKGROUND

The provisions of the Administrative Code related to various sewer policies were reviewed as part of the changes in sewer capacity fees. At the July 25, 2017 Board Meeting the Board adopted revisions to the policy in relation to the capacity fees. Based on the review of staff and the Engineering Services Committee, additional revisions are proposed to update the sewer policy.

DESCRIPTION

Staff would like to clarify in the policy the term of the application period for a sewer connection and simplify the term by limiting it to two years. The previous policy had a term of two years with two additional one year renewal terms that made the administrative process complicated and required additional staff time to track status of these permits and contact applicants. Input from the Engineering Services Committee also was provided to make applications for less than five equivalent dwelling units (EDUs) refundable should a connection to the sewer system not be made during the two-year term. Currently, sewer capacity fees are non-refundable and are retained by the District irrespective of whether a connection is made or not. This requires administrative tracking of applications and capacify fees paid because the policy allows for future landowners to receive credits for previous payments. If the capacity fees are refundable and a developer does not move forward with the project during the term of the application, the fees will be refunded minus administrative costs to the applicant. Administrative cost can be tracked through the District's asset management software which would include the application process, expiration tracking, notifying the applicant of expiration and sending a check with reimbursement of capacity fees. This will eliminate the time-consuming process of tracking expired permits and capacify fees paid for an essentially unlimited period.

We are also changing the nomenclature a bit to clarify the situation. The old policy referred to a sewer permit as being issued once capacity fees are paid. The new policy will stipulate that the submittal of an application form and the payment of capacity fees constitutes an application to connect to the sewer system. Only at such time that a sewer connection is made in compliance with the terms of the application will the connection convert to a permit to use the sewer system. This clarifies that filling out a form and paying a fee does not convey any right to use the system unless a properly constructed and inspected connection is made to the system.

Capacity fees for projects greater than five EDUS will stay non-refundable. These projects have more impact on the District's sewer system and frequently require expansion of the system to be able to take additional flows from the development. Capacity fees are used to expand or rehabilitate the system to support new development and provide commitment of service.

The administrative code sewer policy is being revised to organize and clarify sections. The main revisions to policy are summarized below:

- Revising the sewer application term to two years.
- Requiring a 50% deposit in sewer capacity fees for subdivisions (> 5 parcels) requiring a commitment in service.
- Clarifying that once a sewer lateral is connected to the District's facilities and stubbed out to the property, the account is considered active and will incur sewer service charges per District policy.
- Extending the length of time for a developer to provide documents for extension of facilities from 120 days to 180 days.

Attached you will find Ordinance No. 17-10 for adoption and the revisions to Chapter 9.05 Sewer Permits and final draft of Chapter 9.05 Sewer Permits.

There have been several Engineering Service Committee meetings discussing revisions to the Sewer Policy. At the August 2, 2017 Engineering Services Committee, the committee provided revisions and recommended the policy be brought to the Board for approval. Legal counsel has also reviewed the policy and revisions have been incorporated.

POLICY/STRATEGIC PLAN KEY FOCUS AREA

Chapter 9, Sewer Policy

BOARD OPTIONS/FISCAL IMPACTS

Revenue from capacity fees which are only used to fund the Capital Improvement Program.

1. Adopt Ordinance No. 17-10 amending and updating Administrative Code Chapter 9.05 – Sewer Permits.
2. Adopt Ordinance No. 17-10 amending and updating Administrative Code Section 9.05 – Sewer Permits with revisions.
3. Provide staff with further direction.
4. Do not approve Ordinance No. 17-10 amending and updating Administrative Code Chapter 9.05 Sewer Permits.

STAFF RECOMMENDATION

Staff recommends Option 1.

Sherry Kirkpatrick 8/22/17
Engineering Manager

Ordinance No. 17-10

Ordinance of the Board of Directors of the Rainbow Municipal Water District Amending the Administrative Code Chapter 9.05 – Sewer Permits

WHEREAS, the Rainbow Municipal Water District has, from time to time, adopted various rules and regulations for the operation of the District; and

WHEREAS, certain of those rules and regulations require updating to reflect best practices, as well as changes in applicable laws; and

WHEREAS, the Board of Directors has determined that changes in the rules or regulations of the District shall occur solely by amendment to the Administrative Code;

NOW, THEREFORE,

BE IT ORDAINED by the Board of Directors of Rainbow Municipal Water District as follows:

1. The following rules and regulations of the District, collected are hereby adopted and shall be incorporated into the Administrative Code, consisting of:

9.05 Sewer Permits

2. The General Manager is hereby directed to update the Administrative Code to reflect the approval of these rules and regulations, and to assign or reassign the numbering of the Administrative Code as necessary to codify these rules and regulations as amended.

3. This ordinance shall take effect immediately upon its adoption on this 22th day of August, 2017.

AYES:
NOES:
ABSTAIN:
ABSENT:

_____
Helene Brazier, Board President

ATTEST:

_____
Dawn Washburn, Board Secretary

Section 9.05.010
Applications

9.05.010.1 Applications for a permit for sewer connections shall be submitted on a form prepared by the District which shall, among other things, require the following information:

9.05.010.1.1 The name, address and telephone number of the owner of the property for which the application is made.

9.05.010.1.2 The name, address and telephone number of the property owner's authorized representative, if the application is made by such a representative.

9.05.010.1.3 The address or description of the property for which the application is made.

9.05.010.1.4 The assessors' parcel number for the parcel.

9.05.010.1.5 The location of the District's nearest sewer system pipeline.

9.05.010.1.6 The applicant's proposed use of the property.

9.05.010.1.7 Whether the application is for a new building or use or for the conversion of the use of an existing building.

9.05.010.1.8 Whether the application is for a change in the use of property for which a connection to a District's sewer system exists.

9.05.010.1.9 Whether the application is for a subdivision.

9.05.010.1.10 The estimated number of units to be served.

Section 9.05.02~~1~~0
Terms of ~~Permits~~Sewer Application

Applications for sewer connection shall be granted upon completion of an application as set for in Section **9.05.01~~9~~0**~~9.05.120~~ and payment of fees to the District based upon the sewer capacity estimated to be required to serve a parcel or parcels (also referred to herein as "connection fees"). ~~Permits for sewer connections are non-refundable.~~ The District will establish an account identifying the parcel to record the application and associated payments. The District may use the funds paid under this Section to perform any work required to serve the parcel.~~Permits for sewer connection shall be issued for a term of two years and may be renewed for two additional one-year terms by payment by the permit holder to the District not earlier than 14 days before the expiration of the initial term or, if a permit has been previously renewed, not earlier than 14 days before the expiration of the current renewal term, of a renewal fee in the amount of any increase between the initial cost per EDU. If no connection is made and a permit is not so~~

~~renewed, it shall expire and all rights of the permit holder resulting from the issuance of such permit shall terminate. If connection is made prior to the expiration of the initial or renewal term, the permit shall remain in effect so long as sewer service is required.~~

~~All fees paid on a permit at any time since it was originally granted are non-refundable and shall remain with the District. An owner of an expired permit may apply fees the owner previously paid on the permit towards the purchase of new EDU's as long as (1) the purchase is made by the owner of the expired permit and (2) the owner of the expired permit has continued to pay unconnected charges without interruption. Expired permits are non-transferable. If any change in ownership, including but not limited to foreclosure, bankruptcy, or sale of land occurs, all fees previously paid on the permit remain non-refundable and may not be applied by the new owner towards the purchase of new EDU's.~~

9.05.020.1 Term of Application

Application for sewer connection shall be issued for a term of two years. If no connection is made it shall expire and all rights of the application holder resulting from the issuance of such application shall terminate. Fees paid on the application that has expired will be refunded minus administrative costs to the applicant listed on the sewer application. If connection is made prior to the application's expiration, the application will become an authorized sewer permit and shall remain in effect so long as sewer service is required for that parcel. Once a lateral connection is made to the District's facilities and stubbed out to the property, the account is considered active and will incur sewer service changes per District policy.

9.05.020.2 Application Not Transferrable ~~/ Connection Fee Credit~~

An application for sewer connection relates to and authorizes a connection to the District's sewer system for a parcel of land and uses specifically set forth in the application. An application may not be transferred to or used for a parcel of land which is not specifically described in the application. An application may not be used for a use not specifically set forth in the application.

If applicant desires to sell the property during the term of the application and transfer the application to the future owner with the same parcel of land and use, the applicant must submit in writing to the District of the transfer. Otherwise, at the expiration of the application for sewer connection, the connection fees minus administrative costs, will be refunded to the applicant. The parcel and use described in the application must be the same and the new owner must complete a new application. The term of the application will remain the same.

Section 9.05.03~~2~~0
Applications~~Permits~~ Based on EDU's

Applications~~Permits~~ for sewer connection shall be issued with the amount of connection fee to be paid based on a comparison of the daily volume of wastewater (Q), which will be discharged into the sewer system from the building or buildings for which a application~~permit~~ is sought, and the average daily volume of wastewater discharged from a single family residence in the District

(one Equivalent Dwelling Unit). ApplicationsPermits shall be for the number of EDU's, as determined or estimated by the District, to be used on the property.

Section 9.05.0430
Determination of EDU's

For classes of non-single family dwelling sewer service for which the volume, BOD and SS in wastewater can be determined by sampling, or based on existing empirical data, a schedule shall be calculated relating the flow and strength of the wastes discharged as a multiple of EDU's.

Section 9.05.0540
Issuance of Building Permit

A applicationpermit shall not expire and need not be renewed if, prior to the date of the expiration of its initial or renewal term, a building permit has been issued by the County of San Diego for the building or buildings described in the District's applicationpermit and the application holder provides a copy of the building permit to the District. In such case, the District's applicationpermit shall expire upon the expiration of the building permit if connection is not made to the District's sewer system for the building or buildings described thereon prior to the date of the expiration of the building permit. This subsection does not apply to applicationspermits for subdivisions.

Section 9.05.0650
Septic Tank Conversion

The holder of an application permit issued for a sewer connection for an existing building connected to an onsite septic tank or leach field disposal system must complete the connection of such a building to the sewer system within the initial 365-day term of the application permit, and such an application permit may not be renewed. Septic tanks removed from service must be properly abandoned per State and County of San Diego standards.

Section 9.05.0760
Scope and Changes in Use

Permits are limited to the type and number of EDU's authorized by the permit to be used on the parcel identified in the permit. If a change or expansion in use occurs, including but not limited to, remodeling, enlargement, or new buildings, additional fees, deposits, and charges may be required. Connection charges shall be based on the rates and policies in existence at the time the change or expansion of use. No parcel of property for which a permit for sewer connection is outstanding shall be used for a use different than the use stated in the permit or which will result in a greater volume of wastewater or in wastewater having a greater concentration of BOD or SS being discharged into District's sewer system unless the owner of such parcel makes application for and is issued a permit for sewer connection for each additional EDU or portion thereof of wastewater flow or each additional EDU based on the increased concentration of BOD or SS in the wastewater which will be discharged from said parcel upon the commencement of such different use.

Application for permits for sewer connections for new buildings or for existing buildings that are to be remodeled, renovated, or enlarged shall be accompanied by final plans for such a building, remodeling, renovation, or enlargements and a letter or other certification from the Department of Planning and Land Use of the County of San Diego indicating that such plans will be approved for issuance of a building permit upon issuance by the District of an application for sewer connection.

~~**9.05.060.1 Remodeling or Enlargement**~~

~~No existing building or buildings connected to the District's sewer system shall be remodeled, renovated or enlarged until the owner of such building or buildings makes application for and is issued a permit for such remodel, renovation or enlargement. If the remodel, renovation or enlargement is for a use which will result in a greater volume of wastewater, or in wastewater having a greater concentration of BOD or SS, being discharged into the District's sewer system than as specified in the original permit issued for the building or buildings, then sewer connection fees for each additional EDU or portion thereof of wastewater flow or each additional EDU based on the increased concentration of BOD or SS in the wastewater which will be discharged from said building or buildings must be paid before a permit is issued.~~

~~**9.05.060.2 New Buildings**~~

~~No additional building or buildings shall be constructed on a parcel of property where an existing building is connected to the District's sewer system if the construction and occupancy of such additional building or buildings will result in a greater volume of wastewater or in wastewater having a greater concentration of BOD or SS, being discharged into the District's sewer system unless the owner of such parcel shall make application for and is issued a permit for sewer connection for each additional EDU or portion thereof of wastewater flow or each EDU based on the increased concentration of BOD or SS in the wastewater which would be discharged from the building or buildings to be constructed thereon.~~

~~**9.05.060.3 Determination of Additional EDU's**~~

~~If in any of the above-mentioned cases there will be an increase in both the volume of wastewater and concentration of BOD or SS, the owner of the building or parcel of property must make application for and be issued a permit for sewer connection for the total additional EDU's based on both the increased volume and the increased concentration of BOD or SS, or both BOD and SS as determined by the District.~~

~~Applications for permits for sewer connections for new buildings or for existing buildings that are to be remodeled, renovated or enlarged shall be accompanied by final plans for such a building, remodeling, renovation or enlargement and a letter or other certification from the Department of Planning and Land Use of the County of San Diego indicating that such plans will be approved for issuance of a building permit upon issuance by the District of a permit for sewer connection.~~

Section 9.05.087~~6~~0

Sewer Service Commitments of More than Five EDU's; Subdivisions

9.05.08760.1 Application for Availability

Application for issuance of a Project Availability Letter described in the following section may be submitted to the District on a form approved by the District, and must meet the following conditions, and other conditions as the District may require:

9.05.08760.1.1 File with the District a preliminary parcel or subdivision map and such other information as the District may require.

9.05.08760.1.2 Pay to the District a non-refundable processing fee in an amount set forth by the District.

9.05.08760.2 Project Availability Letters

Upon compliance by applicant with the requirements of the previous paragraphs, and if the District has adequate capacity or expects to have adequate capacity, the District may complete and issue the Project Availability Letter or equivalent form to allow processing of a tentative parcel map or tentative subdivision map. The letter shall certify that the District has, or expects to have, capacity available to serve the proposed subdivision. The letter shall not be a commitment on the part of the District to have or make capacity in the District's sewer system available to the proposed subdivision. No commitment shall be made until applications for sewer connection have been issued in accordance with these rules and regulations.

The issuance of a Project Availability Letter and processing fee shall have the sole effect of entitling the applicant to be considered along with other applicants for the issuance of permits for sewer connection which the District may issue and shall not create any right or entitlement in the applicant to obtain a permit for sewer connection from the District. The Project Availability Letter identifies conditions the applicant much address prior to service commitment.

9.05.08760.3 Application for Commitment

Application for issuance of a Project Commitment Letter described in the following section may be submitted to the District on a form approved by the District, and must meet the following conditions, and other conditions as the District may require:

9.05.080.3.1 File with the District a parcel or subdivision map and such other information as the District may require.

9.05.080.3.2 Pay to the District a non-refundable processing fee in an amount set forth by the District.

9.05.080.4 Project Commitment Letters

Upon compliance by applicant with the requirements of the previous paragraphs and subject to the following conditions, the District may complete and issue the Service Commitment Letter ("Will Serve Letter") or equivalent form, stating that sewer service is committed to subdivision, and the terms of such commitment and conditions which must be satisfied for service.

9.05.08760.4.1 The District has adequate capacity or expects to have adequate capacity.

9.05.08760.4.2 The applicant pays to the District a fee in the amount of 50% of the connection fees required to serve the entire project in order to ensure that sewer capacity is available. The fee may be paid in cash or secured by a bond, letter of credit, time certificate of deposit, or other security satisfactory to the District, in a form and amount satisfactory to the District.

9.05.080.4.3 The District's service commitment shall be effective for a five-year term. The service commitment may be renewed for one additional five-year term upon application and payment to the District of a fee equal to the difference between fees previously paid and the current fee rates at the time of renewal.

9.05.080.4.4 All fees paid for service commitment are non-refundable. The District may draw upon the fees to preserve its service commitment. The District will provide applicant 90 days' notice of the District's intent to use any security provided as a deposit prior to any such use. If the funds are not immediately available to the District at the expiration of its notice, the District's service commitment will expire.

9.05.080.5 Permit for Sewer Connection

Upon application and subject to the following conditions, the District shall issue sewer permits for, and shall reserve sewer capacity to serve, the property covered by each approved subdivision map and any other project requiring more than five EDU's on more than one parcel. If the project is abandoned or changes ownership, the new owner must complete a new application for service for all remaining connections. All connection fees shall be brought current by payment of the difference between fees originally paid and the current fees.

9.05.080.5.1 An approved and recorded subdivision map, or in the event the application concerns a project requiring more than five EDU's on more than one parcel that is not a subdivision, other approved documentation must be filed with District. If the tentative map contemplates the filing of multiple file maps, the District's commitment shall not terminate if the first final map is filed within the term of the District's service commitment and subsequent maps are filed within the time provided by law. If the time for processing a tentative map is extended by the County of San Diego, the District may, but shall not be obligated to,

extend its service commitment.

9.05.080.5.2 All connection fees shall be brought current by payment of difference between fees originally paid and the current fee rates.

9.05.080.5.3 All other conditions and provisions, including those contained in Sewer Permits, Commitment Letters, and Availability Letters, are satisfied within the term of the District's service commitment.

9.05.080.5.4 ~~**9.05.060.1**~~ Permits issued for lots within a sub-division shall not expire and need not be renewed if all of the following have occurred prior to the expiration of the initial term or a renewal term thereof:

9.05.0860.5.41.1 The final subdivision map or final parcel map for the subdivision has been approved by the Board of Supervisors of the County of San Diego and filed in the office of the County Recorder.

9.05.0860.5.41.2 The sewer system within the subdivision has been installed and accepted by the District.

9.05.0860.5.52 Notwithstanding the foregoing provisions of this section, at any time after ten~~10~~ years from the date of filing a final subdivision map, the District shall have the option of terminating permits for those parcels in the subdivision which have not connected to the District's sewer~~age~~ system.

9.04.0860.5.63 Notwithstanding the foregoing provisions of this section, at any time a sub-division requires the execution of an amendment to either the County Joint Use Agreement or the District's Developer Agreement all connection fees shall be brought current by payment of the difference between fees originally paid and the ~~now~~ current fee rates.

9.05.080.6 Other Conditions

The District may require as a condition of service, recordation of any final map or providing of service, that applicant, owner or customer construct or enter into a written agreement to construct, at applicant's sole cost, any necessary or desirable sewer facilities to enable the District to provide sewer service to the property. The agreement shall be secured by a bond, letter of credit, time certificate of deposit or other security, in a form and amount satisfactory to the District, guaranteeing the completion of such construction within the time specified in the agreement in accordance with detailed plans approved by the District for such construction. In addition, the District may require delivery to the District of executed documents, in forms acceptable to the District, for any easements on private or other property, which are necessary or desirable for the construction, operation and maintenance of such sewer facilities.

~~**9.05.070.4.1.2 The sewer system within the subdivision has been installed and accepted by the District.**~~

~~9.05.060.2 Notwithstanding the foregoing provisions of this section, at any time after 10 years from the date of filing a final subdivision map, the District shall have the option of terminating permits for those parcels in the subdivision which have not connected to the District's sewerage system.~~

~~9.04.060.3 Notwithstanding the foregoing provisions of this section, at any time a subdivision requires the execution of an amendment to either the County Joint Use Agreement or the District's Developer Agreement all connection fees shall be brought current by payment of the difference between fees originally paid and the now current fee rates.~~

~~Section 9.05.0870~~
~~Permits Not Transferable~~

~~A Permit for sewer connection relates to and authorizes a connection to the District's sewer system for the parcel of land and uses specifically set forth in the permit. A permit may not be transferred to or used for a parcel of land which is not specifically described in the permit. A permit may not be used for a use not specifically set forth in the permit. Connection fees, deposits and service commitments, shall not be transferrable to any other parcel or property.~~

~~Section 9.05.080~~
~~Remodeling or Enlargement~~

~~No existing building or buildings connected to the District's sewer system shall be remodeled, renovated or enlarged until the owner of such building or buildings makes application for and is issued a permit for such remodel, renovation or enlargement. If the remodel, renovation or enlargement is for a use which will result in a greater volume of wastewater, or in wastewater having a greater concentration of BOD or SS, being discharged into the District's sewer system than as specified in the original permit issued for the building or buildings, then sewer connection fees for each additional EDU or portion thereof of wastewater flow or each additional EDU based on the increased concentration of BOD or SS in the wastewater which will be discharged from said building or buildings must be paid before a permit is issued.~~

~~Section 9.05.090~~
~~Change of Use~~

~~No parcel of property for which a permit for sewer connection is outstanding shall be used for a use different than the use stated in the permit or which will result in a greater volume of wastewater or in wastewater having a greater concentration of BOD or SS being discharged into District's sewer system unless the owner of such parcel makes application for and is issued a permit for sewer connection for each additional EDU or portion thereof of wastewater flow or each additional EDU based on the increased concentration of BOD or SS in the wastewater which will be discharged from said parcel upon the commencement of such different use.~~

~~Section 9.05.100~~
~~New Buildings (See 9.05.130)~~

~~No additional building or buildings shall be constructed on a parcel of property where an existing~~

building is connected to the District's sewer system if the construction and occupancy of such additional building or buildings will result in a greater volume of wastewater or in wastewater having a greater concentration of BOD or SS, being discharged into the District's sewer system unless the owner of such parcel shall make application for and is issued a permit for sewer connection for each additional EDU or portion thereof of wastewater flow or each EDU based on the increased concentration of BOD or SS in the wastewater which would be discharged from the building or buildings to be constructed thereon.

Section 9.05.110
Determination of Additional EDU's

If in any of the above-mentioned cases there will be an increase in both the volume of wastewater and concentration of BOD or SS, the owner of the building or parcel of property must make application for and be issued a permit for sewer connection for the total additional EDU's based on both the increased volume and the increased concentration of BOD or SS, or both BOD and SS as determined by the District.

Section 9.05.09120
Applications

9.05.09120.1 Applications for a permit for sewer connections shall be submitted on a form prepared by the District which shall, among other things, require the following information:

9.05.09120.1.1 The name, address and telephone number of the owner of the property for which the application is made.

9.05.09120.1.2 The name, address and telephone number of the property owner's authorized representative, if the application is made by such a representative.

9.05.09120.1.3 The address or description of the property for which the application is made.

9.05.09120.1.4 The assessors' parcel number for the parcel.

9.05.09120.1.5 The location of the District's nearest sewer system pipeline.

9.05.09120.1.6 The applicant's proposed use of the property.

9.05.09120.1.7 Whether the application is for a new building or use or for the conversion of the use of an existing building.

9.05.120.1.8 Whether the application is for a change in the use of property for which a connection to a District's sewer system exists.

9.05.090120.1.9 Whether the application is for a subdivision.

9.05.09120.1.10 The estimated number of units to be served.

~~9.05.09120.2 Applications shall be made in the name of the property owner and signed by the owner or his or her authorized representative. If the property changes ownership prior to all sewer connections being made, the new owner must complete a new application for service for all remaining connections. All connection fees shall be brought current by payment of the difference between fees originally paid and the now current fee rates.~~

~~**Section 9.05.130**~~
~~**New or Remodel Buildings**~~

~~Applications for permits for sewer connections for new buildings or for existing buildings that are to be remodeled, renovated or enlarged shall be accompanied by final plans for such a building, remodeling, renovation or enlargement and a letter or other certification from the Department of Planning and Land Use of the County of San Diego indicating that such plans will be approved for issuance of a building permit upon issuance by the District of a permit for sewer connection.~~

Section 9.05.090~~140~~
Extension of Facilities

If property for which an application for a permit for sewer connection is made is not adjacent to a District trunk sewer, or if the trunk sewer or other facilities have inadequate capacity, the applicant shall, at the time of filing ~~his~~ application, enter into a written agreement with the District whereby the applicant agrees to construct, at applicant's~~his~~ sole cost, the necessary expansion of the District's sewer~~age~~ facilities to enable the District to provide sewer service to the property. The agreement shall require applicant to provide to the District, within 18~~2~~0 days of the date of the issuance of the application~~permit~~ for sewer connection, as a condition thereto:

9.05.090~~140~~.1 A bond, irrevocable letter of credit, time certificate of deposit or other security, in a form and amount satisfactory to the District, guaranteeing the completion of such construction within the time specified in the agreement.

9.05.090~~140~~.2 Detailed plans approved by the District, and any easements on private property or other property which are necessary or desirable for the construction, operation and maintenance of such sewer~~age~~ facilities.

~~**Section 9.05.150**~~
~~**Effect of Application**~~

~~The issuance of a sewer availability letter and payment of processing fee shall have the sole effect of entitling the applicant to be considered along with other applicants for the issuance of permits for sewer connection which the District may issue and shall not create any right or entitlement in the applicant to obtain a permit for sewer connection from the District. The sewer availability letter identifies conditions that the applicant must address prior to service commitment.~~

~~**Section 9.05.160**~~
~~**Payment of Fees and Satisfaction of Conditions**~~

~~**9.05.160.1 Payment of Fees**~~

~~If the District has capacity to serve the property, it shall notify the applicant in writing of his/her eligibility to have a permit issued, of the amount of the District's fees and charges for the issuance of the permit and of any other conditions which must be satisfied before the permit will be issued. The applicant shall have 10 days following the date of such notice to pay such fees and charges. If an applicant pays such fees and charges within such time, a permit for sewer connection shall be issued by the District. If an applicant fails to pay such fees and charges within such time, his/her entitlement to have a permit issued shall terminate.~~

9.05.090.3~~160.2~~ Satisfaction of Conditions

If an applicant has entered into an agreement with the District for the extension of the District's sewer system, the applicant shall have 1820 days following the date of application~~the issuance of the permit~~ to deliver to the District the security to guarantee the completion of such construction and the detailed plans or easement documents provided for in the agreement. If an applicant fails to provide such security or deliver such plans or easement documents to the District within such time, ~~his/her permit~~application for sewer connection shall automatically terminate.

9.05.090.4 See also, Chapter 6.05 Water and Sewer Line Extension for more detail.

9.05.090.5~~160.3~~ Rights of District

Upon the failure of an applicant to pay fees and charges or to provide such security and deliver such plans and easement documents within the times herein allowed, the application shall~~permit is~~ automatically terminate.~~revoked and the EDU's for which a permit would have been or was issued to such applicant shall be available to other applicants.~~

~~**Section 9.05.170**~~
~~**Sub-Divisions**~~

~~**9.05.170.1 Application**~~

~~Application for issuance of a preliminary project availability letter described in the following section shall be submitted on a form approved by the District. Applicant shall file with the District a preliminary parcel or subdivision map and such other information as the District may require. Concurrently with the filing of an application, each applicant shall pay to the District a nonrefundable processing fee in the amount set forth by the District.~~

~~**9.05.170.2 Preliminary Project Availability Letters**~~

~~Upon compliance by applicant with the requirements of the previous paragraphs, and if the District has adequate capacity or expects to have adequate capacity, the District may complete and issue the Service Availability Letter or equivalent form to allow processing of a tentative parcel map. The letter shall certify that the District has, or~~

expects to have, capacity available to serve the proposed subdivision. The letter shall not be commitment on the part of the District to have or make capacity in the District's sewer system available to the proposed subdivision. No commitment shall be made until permits for sewer connection have been issued in accordance with these rules and regulations.

9.05.170.3 Payment of Connection Fees

Prior to, and as a condition of the service commitment described below, applicant shall pay the District connection fees for the entire project. If payment is made as required herein, the District shall reserve capacity to serve the property covered by each map and permits shall be issued upon recordation of each final map. Connection fees payable pursuant to this section shall be the fees in effect on the date of each payment. If the project is abandoned or changes ownership the new owner must complete a new application for service for all remaining connections. All connection fees shall be brought current by payment of the difference between fees originally paid and the now current fee rates.

9.05.170.4 Other Conditions

The District may require, as a condition of service recordation of any final map or providing of service, that applicant, owner or customer construct or enter into a written agreement to construct, at his sole cost, any necessary or desirable sewerage facilities to enable the District to provide sewer service to the property. The agreement shall be secured by a bond, letter of credit, time certificate of deposit or other security, in a form and amount satisfactory to the District, guaranteeing the completion of such construction within the time specified in the agreement in accordance with detailed plans approved by the District for such construction. In addition, the District may require delivery to the District of executed documents, in forms acceptable to the District, for any easements on private or other property, which are necessary or desirable for the construction, operation and maintenance of such sewerage facilities.

9.05.170.5 Service Commitment

Upon compliance with these rules and regulations, including payment of all applicable fees and charges, and if the District has adequate capacity, the District will complete and issue the service commitment letter ("will serve letter") stating that sewer service is committed to the subdivision, and the terms of such commitment and the conditions which must be satisfied for service. The Service commitment of the District shall be for a period of no greater than two years. A commitment of the District shall not terminate, however, if the final map is recorded within such period and all other conditions and provisions, including but not limited to the Allocation Plan for the Issuance of Sewer Permits, Commitment Letters, and Availability Letters, provided for herein are satisfied. At the end of the first two years and every two years thereafter all connection fees for all services not connected shall be brought current by payment of the difference between fees originally paid and the now current fee rates. If the tentative map contemplates the filing of multiple final maps, the District's commitment shall not be terminated if the first final map is filed within three years and subsequent maps are filed within the time provided by law. If the time for processing a tentative map is extended by the County of

~~San Diego, the District may, but shall not be obligated to, extend its service commitment. Sewer permits for each parcel covered by a final subdivision map shall be issued upon filing such maps.~~

Section 9.05.010
Applications

9.05.010.1 Applications for a permit for sewer connections shall be submitted on a form prepared by the District which shall, among other things, require the following information:

9.05.010.1.1 The name, address and telephone number of the owner of the property for which the application is made.

9.05.010.1.2 The name, address and telephone number of the property owner's authorized representative, if the application is made by such a representative.

9.05.010.1.3 The address or description of the property for which the application is made.

9.05.010.1.4 The assessors' parcel number for the parcel.

9.05.010.1.5 The location of the District's nearest sewer system pipeline.

9.05.010.1.6 The applicant's proposed use of the property.

9.05.010.1.7 Whether the application is for a new building or use or for the conversion of the use of an existing building.

9.05.010.1.8 Whether the application is for a change in the use of property for which a connection to a District's sewer system exists.

9.05.010.1.9 Whether the application is for a subdivision.

9.05.010.1.10 The estimated number of units to be served.

Section 9.05.020
Terms of Sewer Application

Applications for sewer connection shall be granted upon completion of an application as set for in Section 9.05.010 and payment of fees to the District based upon the sewer capacity estimated to be required to serve a parcel or parcels (also referred to herein as "connection fees"). The District will establish an account identifying the parcel to record the application and associated payments. The District may use the funds paid under this Section to perform any work required to serve the parcel.

9.05.020.1 Term of Application

Application for sewer connection shall be issued for a term of two years. If no connection is made it shall expire and all rights of the application holder resulting from the issuance of such application shall terminate. Fees paid on the application that has expired will be refunded minus administrative costs to the applicant listed on the sewer application. If connection is made prior to the application's expiration, the application will become an

authorized sewer permit and shall remain in effect so long as sewer service is required for that parcel. Once a lateral connection is made to the District's facilities and stubbed out to the property, the account is considered active and will incur sewer service changes per District policy.

9.05.020.2 Application Not Transferrable

An application for sewer connection relates to and authorizes a connection to the District's sewer system for a parcel of land and uses specifically set forth in the application. An application may not be transferred to or used for a parcel of land which is not specifically described in the application. An application may not be used for a use not specifically set forth in the application.

If applicant desires to sell the property during the term of the application and transfer the application to the future owner with the same parcel of land and use, the applicant must submit in writing to the District of the transfer. Otherwise, at the expiration of the application for sewer connection, the connection fees minus administrative costs, will be refunded to the applicant. The parcel and use described in the application must be the same and the new owner must complete a new application. The term of the application will remain the same.

Section 9.05.030
Applications Based on EDU's

Applications for sewer connection shall be issued with the amount of connection fee to be paid based on a comparison of the daily volume of wastewater (Q), which will be discharged into the sewer system from the building or buildings for which a application is sought, and the average daily volume of wastewater discharged from a single family residence in the District (one Equivalent Dwelling Unit). Applications shall be for the number of EDU's, as determined or estimated by the District, to be used on the property.

Section 9.05.040
Determination of EDU's

For classes of non-single family dwelling sewer service for which the volume, BOD and SS in wastewater can be determined by sampling, or based on existing empirical data, a schedule shall be calculated relating the flow and strength of the wastes discharged as a multiple of EDU's.

Section 9.05.050
Issuance of Building Permit

A application shall not expire and need not be renewed if, prior to the date of the expiration of its term, a building permit has been issued by the County of San Diego for the building or buildings described in the District's application and the application holder provides a copy of the building permit to the District. In such case, the District's application shall expire upon the expiration of the building permit if connection is not made to the District's sewer system for the building or buildings described thereon prior to the date of the expiration of the building permit. This subsection does not apply to applications for subdivisions.

Section 9.05.060
Septic Tank Conversion

The holder of an application issued for a sewer connection for an existing building connected to an onsite septic tank or leach field disposal system must complete the connection of such a building to the sewer system within the initial 365-day term of the application, and such an application may not be renewed. Septic tanks removed from service must be properly abandoned per State and County of San Diego standards.

Section 9.05.070
Change in Use

Permits are limited to the type and number of EDU's authorized by the permit to be used on the parcel identified in the permit. If a change in use occurs, including but not limited to, remodeling, enlargement, or new buildings, additional fees, deposits, and charges may be required. Connection charges shall be based on the rates and policies in existence at the time the change or expansion of use. No parcel of property for which a permit for sewer connection is outstanding shall be used for a use different than the use stated in the permit or which will result in a greater volume of wastewater or in wastewater having a greater concentration of BOD or SS being discharged into District's sewer system unless the owner of such parcel makes application for and is issued a permit for sewer connection for each additional EDU or portion thereof of wastewater flow or each additional EDU based on the increased concentration of BOD or SS in the wastewater which will be discharged from said parcel upon the commencement of such different use.

Application for permits for sewer connections for new buildings or for existing buildings that are to be remodeled, renovated, or enlarged shall be accompanied by final plans for such a building, remodeling, renovation, or enlargements and a letter or other certification from the Department of Planning and Land Use of the County of San Diego indicating that such plans will be approved for issuance of a building permit upon issuance by the District of an application for sewer connection.

Section 9.05.080
Sewer Service Commitments of More than Five EDU's; Subdivisions

9.05.080.1 Application for Availability

Application for issuance of a Project Availability Letter described in the following section may be submitted to the District on a form approved by the District, and must meet the following conditions, and other conditions as the District may require:

9.05.080.1.1 File with the District a preliminary parcel or subdivision map and such other information as the District may require.

9.05.080.1.2 Pay to the District a non-refundable processing fee in an amount set forth by the District.

9.05.080.2 Project Availability Letters

Upon compliance by applicant with the requirements of the previous paragraphs, and if the District has adequate capacity or expects to have adequate capacity, the District may complete and issue the Project Availability Letter or equivalent form to allow processing of a tentative parcel map or tentative subdivision map. The letter shall certify that the District has, or expects to have, capacity available to serve the proposed subdivision. The letter shall not be a commitment on the part of the District to have or make capacity in the District's sewer system available to the proposed subdivision. No commitment shall be made until applications for sewer connection have been issued in accordance with these rules and regulations.

The issuance of a Project Availability Letter and processing fee shall have the sole effect of entitling the applicant to be considered along with other applicants for the issuance of permits for sewer connection which the District may issue and shall not create any right or entitlement in the applicant to obtain a permit for sewer connection from the District. The Project Availability Letter identifies conditions the applicant much address prior to service commitment.

9.05.080.3 Application for Commitment

Application for issuance of a Project Commitment Letter described in the following section may be submitted to the District on a form approved by the District, and must meet the following conditions, and other conditions as the District may require:

9.05.080.3.1 File with the District a parcel or subdivision map and such other information as the District may require.

9.05.080.3.2 Pay to the District a non-refundable processing fee in an amount set forth by the District.

9.05.080.4 Project Commitment Letters

Upon compliance by applicant with the requirements of the previous paragraphs and subject to the following conditions, the District may complete and issue the Service Commitment Letter ("Will Serve Letter") or equivalent form, stating that sewer service is committed to subdivision, and the terms of such commitment and conditions which must be satisfied for service.

9.05.080.4.1 The District has adequate capacity or expects to have adequate capacity.

9.05.080.4.2 The applicant pays to the District a fee in the amount of 50% of the connection fees required to serve the entire project in order to ensure that sewer capacity is available. The fee may be paid in cash or secured by a bond, letter of credit, time certificate of deposit, or other security satisfactory to the District, in a form and amount satisfactory to the District.

9.05.080.4.3 The District's service commitment shall be effective for a five-year term. The service commitment may be renewed for one additional five-year term upon application and payment to the District of a fee equal to the difference between fees previously paid and the current fee rates at the time of renewal.

9.05.080.4.4 All fees paid for service commitment are non-refundable. The District may draw upon the fees to preserve its service commitment. The District will provide applicant 90 days' notice of the District's intent to use any security provided as a deposit prior to any such use. If the funds are not immediately available to the District at the expiration of its notice, the District's service commitment will expire.

9.05.080.5 Permit for Sewer Connection

Upon application and subject to the following conditions, the District shall issue sewer permits for, and shall reserve sewer capacity to serve, the property covered by each approved subdivision map and any other project requiring more than five EDU's on more than one parcel. If the project is abandoned or changes ownership, the new owner must complete a new application for service for all remaining connections. All connection fees shall be brought current by payment of the difference between fees originally paid and the current fees.

9.05.080.5.1 An approved and recorded subdivision map, or in the event the application concerns a project requiring more than five EDU's on more than one parcel that is not a subdivision, other approved documentation must be filed with District. If the tentative map contemplates the filing of multiple file maps, the District's commitment shall not terminate if the first final map is filed within the term of the District's service commitment and subsequent maps are filed within the time provided by law. If the time for processing a tentative map is extended by the County of San Diego, the District may, but shall not be obligated to, extend its service commitment.

9.05.080.5.2 All connection fees shall be brought current by payment of difference between fees originally paid and the current fee rates.

9.05.080.5.3 All other conditions and provisions, including those contained in Sewer Permits, Commitment Letters, and Availability Letters, are satisfied within the term of the District's service commitment.

9.05.080.5.4 Permits issued for lots within a subdivision shall not expire and need not be renewed if all of the following have occurred prior to the expiration of the initial term or a renewal term thereof:

9.05.080.5.4.1 The final subdivision map or final parcel map for the subdivision has been approved by the Board of Supervisors of the County of San Diego and filed in the office of the County Recorder.

9.05.080.5.4.2 The sewer system within the subdivision has been installed and accepted by the District.

9.05.080.5.5 Notwithstanding the foregoing provisions of this section, at any time after ten years from the date of filing a final subdivision map, the District shall have the option of terminating permits for those parcels in the subdivision which have not connected to the District's sewer system.

9.04.080.5.6 Notwithstanding the foregoing provisions of this section, at any time a subdivision requires the execution of an amendment to either the County Joint Use Agreement or the District's Developer Agreement all connection fees shall be brought current by payment of the difference between fees originally paid and the current fee rates.

9.05.080.6 Other Conditions

The District may require as a condition of service, recordation of any final map or providing of service, that applicant, owner or customer construct or enter into a written agreement to construct, at applicant's sole cost, any necessary or desirable sewer facilities to enable the District to provide sewer service to the property. The agreement shall be secured by a bond, letter of credit, time certificate of deposit or other security, in a form and amount satisfactory to the District, guaranteeing the completion of such construction within the time specified in the agreement in accordance with detailed plans approved by the District for such construction. In addition, the District may require delivery to the District of executed documents, in forms acceptable to the District, for any easements on private or other property, which are necessary or desirable for the construction, operation and maintenance of such sewer facilities.

Section 9.05.090
Extension of Facilities

If property for which an application for a permit for sewer connection is made is not adjacent to a District trunk sewer, or if the trunk sewer or other facilities have inadequate capacity, the applicant shall, at the time of filing application, enter into a written agreement with the District whereby the applicant agrees to construct, at applicant's sole cost, the necessary expansion of the District's sewer facilities to enable the District to provide sewer service to the property. The agreement shall require applicant to provide to the District, within 180 days of the date of the issuance of the application for sewer connection, as a condition thereto:

9.05.090.1 A bond, irrevocable letter of credit, time certificate of deposit or other security, in a form and amount satisfactory to the District, guaranteeing the completion of such construction within the time specified in the agreement.

9.05.090.2 Detailed plans approved by the District, and any easements on private property or other property which are necessary or desirable for the construction, operation and maintenance of such sewer facilities.

9.05.090.3 Satisfaction of Conditions

If an applicant has entered into an agreement with the District for the extension of the District's sewer system, the applicant shall have 180 days following the date of application to deliver to the District the security to guarantee the completion of such construction and the detailed plans or easement documents provided for in the agreement. If an applicant fails to provide such security or deliver such plans or easement documents to the District within such time, application for sewer connection shall automatically terminate.

9.05.090.4 See also, Chapter 6.05 Water and Sewer Line Extension for more detail.

9.05.090.5 Rights of District

Upon the failure of an applicant to pay fees and charges or to provide such security and deliver such plans and easement documents within the times herein allowed, the application shall automatically terminate.

RAINBOW MUNICIPAL WATER DISTRICT
Committed to Excellence

BOARD ACTION

BOARD OF DIRECTORS

August 22, 2017

SUBJECT

DISCUSSION AND POSSIBLE ACTION TO ADOPT ORDINANCE NO. 17-11 REVISING APPENDIX A WATER AND SEWER RATES AND CHARGES

BACKGROUND

At the December 6, 2016 Board Meeting, Resolution No. 16-20 was adopted for pass through water charges, annual inflation adjustment and increase in backflow fees. At the July 25, Board Meeting, Ordinance No. 17-07 was adopted regarding water and sewer capacity charges. The Appendix A to Ordinance No. 17-07 was not the revised Appendix A from Resolution No. 16-20 and used a previous Appendix A from Ordinance No. 15-10.

DESCRIPTION

This is an administrative correction to update Ordinance No. 17-07 with Ordinance No. 17-11. This revises Section 9 to reference both Resolution No. 16-20 and Ordinance No. 17-07 and provides the appropriate Appendix A.

Attached you will find Ordinance No. 17-11 for adoption which includes the new Exhibit 1. There are no changes to rates or fees with this adoption. Ordinance No. 17-11 combines Exhibit 1 from Resolution No. 16-20 and Ordinance No. 17-07.

POLICY/STRATEGIC PLAN KEY FOCUS AREA

N/A

BOARD OPTIONS/FISCAL IMPACTS

1. Adopt Ordinance No. 17-11 revising Appendix A Water and Sewer capacity charges.
2. Adopt Ordinance No. 17-11 with revisions.

STAFF RECOMMENDATION

Staff recommends Option 1.

Sherry Kirkpatrick
Engineering Manager

8/22/17

ORDINANCE NO. 17-11

ORDINANCE OF THE RAINBOW MUNICIPAL WATER DISTRICT REVISING APPENDIX A OF THE RULES AND REGULATIONS REGARDING WATER AND SEWER CAPACITY CHARGES

WHEREAS, the Rainbow Municipal Water District ("RMWD" or the "District") Board of Directors is committed to providing reliable, high-quality water and water reclamation services in a fiscally sustainable manner; and

WHEREAS, to meet this commitment, the District completed an update to the Water and Wastewater Master Plan which undertook an evaluation of the potable and wastewater systems, existing and projected demands, and infrastructure needs; on April 26, 2016, the Board of Directors adopted the 2016 Water and Wastewater Master Plan Update; and

WHEREAS, on or around March 22, 2016, the District retained Willdan Financial Services ("WFS") to perform an asset valuation study and alternative capacity fee methodologies. WFS performed site visits to all District facilities, documented conditions of infrastructure, reviewed our current planning documents, and valued our property equipment and inventory. On February 28, 2017, the Board of Directors approved the Asset Valuation Study by WFS. The Asset Valuation was used to represent the value of the existing water and sewer system for the calculation of the capacity fees.

WHEREAS, on or around February 3, 2017, the District retained Raftelis Financial Consultants ("RFC"), an industry-leading third party capacity rate and fee public finance consultant, to review and calculate the water and sewer capacity fees; RFC used information and data from the Asset valuation Study and the 2016 Water and Wastewater Plan Update, existing debt, reserve balances and consumer characteristics to calculate the water and sewer capacity charges; and

WHEREAS, between June 2016 and July of 2017, the District held a series of eighteen meetings with the District Engineering Services Committee and Budget and Finance Committee to discuss the RFC study and details regarding the capacity fees on the following dates: June 1, 2016, September 13, 2016, October 5 and 11, 2016, November 8, 2016 December 7 and 13, 2016, January 8 and 10, 2017, February 1 and 14, 2017, March 14, 2017 April 5 and 11, 2017 May 3 and 9, 2017, June 7, 2017, and July 5, 2017 which meetings were publicly noticed and open to the public; and

WHEREAS, the District Board of Directors held a publicly noticed Board Meeting on May 30, 2017 to substantively review the proposed capacity charges; and

WHEREAS, the final RFC Water and Sewer Capacity Fee Review was published on RWMD's website on June 8, 2017 for the public's consumption; and

WHEREAS, at this point in time, based on the RFC's recommendations and findings, together with all prior public meetings, staff reports and presentations, the Board of Directors of the RMWD hereby desires to adjust certain capacity charges related to the provision of water and sewer service; and

WHEREAS, the Board of Directors is provided authority to establish rates and charges by California Water Code §71616 and §71670; and

WHEREAS, the Public Hearing was held at the duly noticed public meeting on July 25, 2017; and

WHEREAS, at the Public Hearing the District Board of Directors heard and considered all oral testimony, written materials, and written protests concerning the establishment and imposition of the proposed water and sewer capacity charges and at the close of the Public Hearing the District did not receive written protests against the establishment and imposition of the proposed water and sewer capacity charges; and

WHEREAS, by adopting this Ordinance, the District Board of Directors hereby desires to adopt and implement the proposed water and sewer capacity charges as set forth below; and

WHEREAS, the water and sewer capacity charges will be effective on August 1, 2017.

NOW, THEREFORE, BE IT ORDAINED by the Board of Directors of the Rainbow Municipal Water District as follows:

SECTION 1: The District Board of Directors finds and determines that the foregoing Recitals are true and correct and incorporates the Recitals herein.

SECTION 2: The District Board of Directors hereby finds that obtaining funds for capital projects necessary to maintain service within the existing services area, and passing through wholesale water capacity charges by the San Diego County Water Authority are hereby determined that this Ordinance is exempt from the requirements of the California Environmental Quality Act (CEQA).

SECTION 3: Based on RFC's recommendations and findings, together with all prior public meetings, staff reports, recommendations and presentations, as well as all oral testimony, written materials, and written protests concerning the establishment and imposition of the proposed capacity charges presented to the Board of Directors before the close of the duly noticed Public Hearing, the District Board of Directors hereby finds and determines that the proposed rates for water service comply substantively with Government Code 66000 for the following reasons:

a) The revenues derived from the capacity charges do not exceed the estimated reasonable costs of providing the service for which the charge is imposed and the water and sewer capacity charges insures that each user will pay their fair share into the system based on actual demands upon the system;
b) The revenues derived from the capacity charges will be deposited in a separate fund and will not be used for any purpose other than that for which the fee is being imposed; For each separate account, the District's finance officer shall, within one hundred eighty days (180) days after the last day of each fiscal year, make available to the public and present to the District Board of Directors a written report containing all the information required by Government Code section 66013(d).

SECTION 4: Effective August 1, 2017, the District Board of Directors hereby adopts and implements the update to the water and sewer capacity charges for the District's water services as set forth in the "Revised Appendix A" attached hereto as **Exhibit 1**, entitled "Water and Sewer Rates and Charges – Effective August 1, 2017". Exhibit 1 hereby replaces in its entirety former Appendix A to the District Rules and Regulations. The capacity charges set forth in Exhibit 1 shall be effective August 1, 2017.

SECTION 5: The District shall collect the capacity fees established by the San Diego County Water Authority in accordance with their requirements as set forth from time to time. Any increases in San Diego County Water Authority capacity fees shall automatically be passed through. All protests or objections to the San Diego County Water Authority capacity fees should be direct to: San Diego County Water Authority, 4677 Overland Avenue, San Diego, CA 92123.

SECTION 6: The District Board of Directors hereby authorizes and directs the District General Manager to (a) implement and take all actions necessary to effectuate the water and sewer capacity charges as set forth herein and in Exhibit 1; (b) file a Notice of Exemption with the County Clerk for San Diego County within five (5) working days of the date of the adoption of this Ordinance.

SECTION 7: If any section, subsection, subdivision, sentence, clause, or phrase in this Ordinance or any part thereof is for any reason held to be unconstitutional or invalid, ineffective by any court of competent jurisdiction, such decision shall not affect the validity or effectiveness of the remaining portions of this Ordinance or any part thereof. The District Board of Directors hereby declares that it would have adopted each section irrespective of the fact that any one or more subsections, subdivisions, sentences, clauses, or phrases be declared unconstitutional, invalid, or ineffective.

SECTION 8: This Ordinance shall supersede all other previous District Board of Directors resolutions and ordinances that may conflict with, or be contrary to, this Ordinance.

SECTION 9: This Ordinance amends Resolution 16-20 dated December 6, 2016 and Ordinance 17-07 dated July 25, 2017 as of August 1, 2017;

PASSED AND ADOPTED at a special meeting of the Board of Directors of Rainbow Municipal Water District held on the 22th day of August, 2017 by the following roll call vote:

AYES:
NOES:
ABSTAIN:
ABSENT:

_____
Helene Brazier, President
Board of Directors

ATTEST:

_____
Dawn Washburn, Board Secretary

RAINBOW MUNICIPAL WATER DISTRICT

Appendix A

Water and Sewer Rates and Charges

EFFECTIVE August 1, 2017
Adopted by Ordinance No. 17-11
(***) Denotes Change from Previous Schedule

WATER COMMODITY CHARGE

A. BASIC COMMODITY CHARGE
(Basic rate for all water delivered through the water meter)
1 Unit = 748 Gallons = 100 cubic feet (cf)

Service Category	Water Rate
Single Family Residential– first 10 units each month	$3.42 / 100 cf
Single Family Residential – 11 -26 Units each month.	$3.60 / 100 cf
Single Family Residential – Over 26 Units each month.	$3.94 / 100 cf
Multi-Family Residential – all units	$3.52 / 100 cf
Commercial – all units	$3.63 / 100 cf
Agricultural w/ Residence– first 10 units each month	$3.42 / 100 cf
Agricultural w/ Residence – 11 -26 Units each month.	$3.60 / 100 cf
Agricultural w/ Residence – Over 26 Units each month.	$3.35 / 100 cf
Agricultural w/o Residence – all units	$3.35 / 100 cf
Institutional – all units	$3.70 / 100 cf
Construction – all units	$4.44 / 100 cf
Transitional Special Agricultural Water Rates (TSAWR)	
TSAWR Domestic - first 10 units each month	$3.42 / 100 cf
TSAWR Domestic – 11 to 26 units each month	$3.60 / 100 cf
TSAWR Domestic – Over 26 units each month	$2.87 / 100 cf
TSAWR Commercial – all units	$2.87 / 100 cf

B. PUMPING ZONE CHARGES

Service Area	Amount
Monthly fixed charge for all zones	$9.51 per meter
1 - Rainbow Heights	$0.80 / 100 cf
2 - Improvement District U-1	$0.50 / 100 cf
3 - Vallecitos	$0.28 / 100 cf
4 - Northside	$0.10 / 100 cf
5 - Morro	$0.15 / 100 cf
6 - Huntley	$0.58 / 100 cf
7 - Magee	$2.62 / 100 cf

C. WATER ALLOCATION PENALTY RATES

The Water Allocation Penalty charges shall apply only to TSAWR customers in the event that the San Diego County Water Authority (SDCWA) establishes mandatory TSAWR allocation cutbacks. During a TSAWR allocation, SDCWA will establish an allocation reduction percentage. Each TSAWR customer will be issued a baseline allocation that is calculated from a base year defined by SDCWA and this allocation will be reduced by the SDCWA defined reduction percentage.

A penalty of $3.31 per unit will be charged to TSAWR customers who use greater than their reduced allocation but less than their baseline allocation. A penalty of $6.62 per unit will be charged to TSAWR customers who use more than their baseline allocation.

FIXED ACCOUNT CHARGES

A. METER SERVICES CHARGES

RMWD Monthly Fixed O&M Charges for Single Family Residential, Multi-Family Residential, Commercial, and Institutional

Meter Size	Monthly Charge
5/8 "	$ 24.40
3/4 "	$ 24.40
1"	$ 38.11
1 1/2"	$ 72.37
2"	$ 113.49
3"	$ 243.68
4"	$ 435.56
6"	$ 894.68

NOTE: Locked or sealed meters are assessed a charge equal to the above monthly charge for the appropriate sized meter.

RMWD Monthly Fixed O&M Charges for Agricultural w/Residence, Agricultural w/o residence, TSAWR Domestic, and TSAWR Commercial

Meter Size	Monthly Charge
5/8 "	$ 44.32
3/4 "	$ 44.32
1"	$ 71.29
1 1/2"	$ 138.75
2"	$ 219.70
3"	$ 476.01
4"	$ 853.76
6"	$ 1,757.62

NOTE: Locked or sealed meters are assessed a charge equal to the above monthly charge for the appropriate sized meter.

SDCWA Fixed Pass Through Charges

Charge is assessed by the San Diego County Water Authority and passed through directly by RMWD to all meter customers. These charges are in addition to RMWD Monthly Fixed O&M Charges

Monthly SDCWA Fixed Pass Through Charge for Single Family Residential, Multi-Family Residential, Agricultural w/ residence, Agricultural w/o Residence, Commercial, and Institutional

Meter Size	Monthly Charge
5/8 "	$ 36.74
3/4 "	$ 36.74
1"	$ 61.24
1 1/2"	$ 122.48
2"	$ 195.96
3"	$ 428.68
4"	$ 771.63
6"	$ 1,592.26

Monthly SDCWA Fixed Pass Through Charge for TSAWR Domestic, and TSAWR Commercial

Meter Size	Monthly Charge
5/8 "	$ 17.05
3/4 "	$ 17.05
1"	$ 28.42
1 1/2"	$ 56.84
2"	$ 90.94
3"	$ 198.93
4"	$ 358.08
6"	$ 738.90

B. OTHER FIXED ACCOUNT CHARGES

(Additional charges added to the basic meter service charge to reflect other special service conditions.)

Backflow device annual inspection fee

Meter Size	Monthly Charge
5/8 "	$ 4.81
3/4 "	$ 4.81
1"	$ 4.81
1 1/2"	$ 4.81
2"	$ 4.81
3"	$ 8.14
4"	$ 8.14
6"	$ 8.14

Service Conditions	Monthly Charge
Bypass Meter (for detector check systems) or Fire Service Only Meters	$10.00
Fire Standby Charge (Vista Valley Area) (Applicable to properties under the jurisdiction of the Vista Fire Department. See Resolution No. 85-24)	$ 5.00
Fire Standby Charge (All Other Areas)	$ 5.00

MISCELLANEOUS CHARGES

A. CONSTRUCTION METERS

Deposit	$1,825.00
Installation Fee	$ 115.00
Relocation Fee	$ 50.00
Meter Service Fee (3" O & M)	$ 243.68
Water Commodity Charge	$4.44 / 100 cf

B. OTHER CHARGES

Unpaid Bills (delinquency)	5% of unpaid balance-1st mo. 1 1/2% of unpaid balance per month thereafter.
Returned Check Charge	$30.00
Tax Roll Fee (Accounts collected through SD County Assessor's Office)	$45.00
48-hour Lock Off Notice	$40.00
Service Turn-on Fee	$50.00
After hours Turn-on-Fee	$75.00
Cut Padlock Fee	$22.00
Meter Testing Charge	$ 50.00 (1" or smaller)
(testing for 3" and greater is outsourced)	$ 71.00 (1 1/2" or 2")
	$225.00 (3" or 4")
	$225.00 (6")

WATER CAPACITY CHARGES

The SDCWA charge is collected by RMWD forwarded quarterly to the SDCWA.
Capacity fees list are for **residential only**, all other land use types will be calculated case by case based on the number of EDUs (equivalent dwelling unit).

Capacity Class	Reference Meter Size	Water Capacity Charge	SDWCA Fee	SDCWA Treatment Charge
A	5/8"	$ 6,241	$ 5,029	$ 128
B	3/4"	$ 10,401	$ 5,029	$ 128

C	1"	$ 16,642	$ 8,046	$ 205
D	1 1/2"	$ 27,043	$ 15,087	$ 384
E	2"	$ 62,406	$ 26,151	$ 666
F	3"	$ 124,812	$ 48,278	$ 1,129
G	4"	$ 208,020	$ 82,476	$ 2,099

Lot size less than 5,000 sqft (0.11 acre) with de minimis irrigation of less than 1,000 sqft may qualify for a 5/8 inch meter.

Lot size less than 21,7880 sqft (0.5 acres) may qualify for a 3/4 inch meter.

For cases where demand qualifies for a smaller capacity meter, but requires a larger meter to meet fire flow requirements only, a meter one size larger may be installed and a monthly fire standby charge will be assessed. Written confirmation from the fire department is required.

SEWER CHARGES

A.
Commercial Customers

Sewer Service Monthly Charge	$75.50 per EDU

Residential and Multi-family Customers
Rate is based on the lowest month of water used in the previous fiscal year. New homes with no usage history default to 5 units per month for the first year.

Water Usage Per Month	Per EDU
1 Unit	$28.70
2Units	$35.70
3 Units	$42.50
4 Units	$49.50
5 Units	$56.20
6 Units	$63.20
7 Units	$63.20
8 Units	$63.20
9 Units	$63.20
10 Units	$63.20
11 Units or greater	$75.50
Commercial	$75.50

B. EDU description and basis for Sewer Capacity Charges

Single Family Residential, Apartment, Condominium, Duplex or Mobile home, Each Unit

Square Footage	
≤1,250	0.8 EDU
1,251 to 2,000	1.0 EDU
2,001 to 3,000	1.2 EDU
3,001 to 4,500	1.5 EDU
4,501 to 6,000	2.0 EDU
>6,000	Case by Case

Motel or Hotel	
Each Living Unit with Kitchen	0.80 EDU
Each Living Unit without Kitchen	0.40 EDU
Commercial Business - Retail shop or Offices Equipped with Restroom, Up to 1,000 sf.	1.20 EDU
Commercial Business – Each additional 1,000 sf. of gross floor space or part thereof.	0.80 EDU
Automobile Service Stations	
A. Providing RV holding tank disposal station	2.00 EDU
B. Four (4) or under Gas Pumps	0.80 EDU
C. Over four (4) Gas Pumps	1.00 EDU
Church, Fraternal Lodge or similar auditorium for each unit of seating capacity for 200 persons.	1.0 EDU
Bakery	1.0 EDU
Theater - 200 seating capacity	1.40 EDU
Hospital - per bed	0.40 EDU
Convalescent Hospital - Boarding Home - per bed	0.40 EDU
Labor Camp, Per Bed	0.10 EDU
Mortuary	1.20 EDU
Car Wash	1.20 EDU
Grocery Store	1.20 EDU
Self Service Laundry - each washing machine	0.40 EDU
Swimming Pool - with restrooms	1.20 EDU
Spas - with restrooms	1.20 EDU

Country Clubs with common restroom facilities		1.20 EDU
Each additional shower unit, wash closet and/or fixture.		
Restaurant – Base (Using non-disposable tableware		2.70 EDU
Per each seven (7) seats or part thereof		1.20 EDU
Restaurants—Base (Using disposable tableware)		1.20 EDU
Per each twenty-one (21) seats or part thereof		1.20 EDU
Schools (Public or Private)		
Elementary	Per each 60 students	1.20 EDU
Junior High School	Per each 40 students	1.20 EDU
High School	Per each 30 students	1.20 EDU

D. Sewer Capacity Charge $14,126 per EDU

PROSPECTIVE ANNUAL RATE INCREASES VIA PASS THROUGH CHARGES FOR WATER

To avoid operational deficits, depletion of reserves, an inability to address infrastructure and water quality improvements, and to continue to provide a safe, reliable water supply, the District will pass through to its customers: (1) any increases in the rates of the SDCWA Fixed Charges imposed on the District by SDCWA (an "SDCWA Fixed Pass Through"); (2) any future charges and any rate increases to any other existing charges, including imported water charges, that are imposed on the District by SDCWA (a "SDCWA Pass Through"); (3) any increases in energy costs imposed on the District by San Diego Gas and Electric ("an Energy Pass Through"); (4) future increases in the costs of operating and maintaining the water system, including capital facilities, based on an annual inflationary adjustment in the San Diego Consumer Price Index, All Items, 1982-1984=100 for All Urban Consumers ("CPI-U") determined by the United States Department of Labor Statistics annually for the previous calendar year (an "Inflationary Pass Through"); and (5) any reduction in the allocation of ad valorem property tax revenues by the State of California ("Ad Valorem Pass Through") pursuant to Proposition 1A. Proposition 1A was approved by the voters in November 2004, with the intent of protecting the property tax revenues of local governments. Under Proposition 1A, the State of California is allowed to borrow local government property taxes on the condition that they will be paid back within 3 years. The foregoing are collectively referred to in this ordinance as "Pass Through Increases."

Any SDCWA Fixed Pass Through will only impact the rates of the SDCWA Fixed Charges. Any SDCWA Pass Through, any Inflationary Pass Through, Energy Pass Through, and any Ad Valorem Pass Through will impact the rates of the Meter Charge, Commodity Charge, and the Fire Meter Service Charge. The District may annually implement the Pass Through Increases for a five-year period commencing January 1, 2016, through December 31, 2021, provided, however, that (1) any increase to the rates described above as a result of any SDCWA Pass Through, Energy Pass Through, Inflationary Pass Through, or Ad Valorem Pass Through shall not exceed 15% per year; and (2) in no event shall such rates be increased by more than the cost of providing water service.

END

RAINBOW MUNICIPAL WATER DISTRICT
Committed to Excellence

BOARD ACTION

BOARD OF DIRECTORS

August 22, 2017

SUBJECT

DISCUSSION AND POSSIBLE ACTION TO APPROVE RESOLUTION NO. 17-23 DESIGNATING AN AUTHORIZED REPRESENTATIVE TO SUBMIT AN APPLICATION, EXECUTE AN AGREMEENT AND ANY AMENDMENTS, AND CERITIFY FUNDING DISBURSEMENTS WITH THE STATE OF CALIFORNIA FOR A DESALINATION GRANT

BACKGROUND

Imported water supplies are increasing in cost and becoming increasingly unreliable. The District's Strategic Plan includes a Key Focus Area related to water resources which includes a goal to diversify its water supply portfolio to ensure safe, sustainable, and reliable sources for its customers. The District is currently in the feasibility and planning stages of a project to desalinate brackish water in the Bonsall Basin . The water source would be imported water return flows. If successful, this project would develop a local supply to offset our dependence on imported water.

The State of California through the Department of Water Resources (DWR) provides assistance, consisting of grants for planning, design and construction of water desalination facilities. Desalination is the removal of salts and dissolved solids from saline water, which can come from brackish or ocean water. Funding is provided primarily from Proposition 1 funds and remnants of Proposition 50. In November of 2002 California voters passed Proposition 50, the Water Security, Clean Drinking Water, Coastal and Beach Protection Act of 2002 which provided $50 million for grants for desalination of ocean or brackish water. In November of 2014, Proposition 1, a part of which is the Water Quality, Supply and Infrastructure Improvement Act of 2014 provides $725 million for grants/loans for water recycling and advance treatment, including desalination projects. The portion of funds allocated to desalination projects is $100 million.

DESCRIPTION

The studies in the San Luis Rey Basin, which contains the Pala and Bonsall Sub-Basins are eligible for the desalination grant. If approved, the feasibility studies have a maximum funding cap of $700,000 per DWR's discretion. There is a funding match required of 50%. Proposals are due on September 1, 2017. To apply for the grant, a complete application package must be submitted to the DWR including a resolution designating an authorized representative to apply for the grant. Attached you will find Resolution No. 17-23.

Please note that there is no guarantee that the grant will be awarded when our application is submitted. Staff does not think there are any specific impediments to receiving the grant but we want to be clear that approval is not guaranteed.

POLICY/STRATEGIC PLAN KEY FOCUS AREA

Strategic Focus Area One: Water Resources: Finding a local supply to achieve long-term reliability, economy and sustainability and reduce our reliance on imported water.
Strategic Focus Area Four: Fiscal Responsibility: Applying for available funds through grants from the State to offset District costs and reduce the fiscal impact to rate payers wherever possible.

BOARD OPTIONS/FISCAL IMPACTS

This will offset the costs of the Bonsall Basin Desalter Feasibility Study which is budgeted at $450,000 this fiscal year.

1. Approve Resolution 17-23 designating authorize representative to submit an application, execute an agreement and any amendments, and certifying funding disbursements with the state of California for a desalination grant.

2. Do not approve Resolution 17-23. District will not apply for the desalination grant.

3. Provide other direction to Staff.

STAFF RECOMMENDATION

Staff recommends Option 1.

Sherry Kirkpatrick 08/22/17
Engineering Manager

RESOLUTION NO. 17-23

RESOLUTION OF THE BOARD OF DIRECTORS OF THE RAINBOW MUNICIPAL WATER DISTRICT DESIGNATING AN AUTHORIZED REPRESENTATIVE TO SUBMIT AN APPLICATION, EXECUTE AN AGREEMENT AND ANY AMENDMENTS, AND CERTIFY FUNDING DISBURSEMENTS WITH THE STATE OF CALIFORNIA FOR A DESLINATION GRANT

WHEREAS the Rainbow Municipal Water District desires to determine the feasibility of using desalinated water to offset potable water; and

WHEREAS pursuant and subject to all of the terms and provisions of the Water Quality, Supply, and Infrastructure Improvement Act of 2014 (Proposition 1, California Water Code Section 79700 et seq.) the California Department of Water Resources is sponsoring Round 4 funding of the Water Desalination Grant Program; and

BE IT RESOLVED by the Board of Directors of the Rainbow Municipal Water District (the "Entity"), as follows:

The General Manager (the "Authorized Representative") or designee is hereby authorized and directed to sign and file, for and on behalf of the Entity, an application for funding from the Department of Water Resources for an amount not to exceed $700,000, for the project titled Bonsall Basin Desalter Implementation, under the terms and provisions of the Water Desalination Grant Program, and

That the Entity hereby agrees and further does authorize the aforementioned representative or his/her designee to certify that the Entity has and will comply will all applicable state and federal statutory and regulatory requirements related to any federal and state funds received, and

That the authorized representative or his/her designee of the Entity is hereby authorized to negotiate and execute a funding agreement and any amendments or change orders thereto, and to certify funding disbursement on behalf of the Entity.

PASSED AND ADOPTED at a regular meeting of the Board of Directors of the Rainbow Municipal Water District held on the 22nd day of August, 2017 by the following vote, to wit:

AYES:
NOES:
ABSENT:
ABSTAIN:

_____
Helene Brazier, Board President

ATTEST:

_____
Dawn M. Washburn, Board Secretary

RAINBOW MUNICIPAL WATER DISTRICT
Committed to Excellence

BOARD ACTION

BOARD OF DIRECTORS

August 22, 2017

SUBJECT

DISCUSSION AND POSSIBLE ACTION TO APPROVE RESOLUTION NO. 17-24 — A RESOLUTION OF THE BOARD OF DIRECTORS OF RAINBOW MUNICIPAL WATER DISTRICT ESTABLISHING CLASSIFICATIONS AND MONTHLY PAY RANGES FOR DISTRICT EMPLOYEES AND THE GENERAL MANAGER EFFECTIVE AUGUST 29, 2017 THROUGH JUNE 30, 2018

BACKGROUND

In compliance with state and CalPERS regulations, the District maintains a Salary Grade structure that includes all job titles, salary grade levels, and monthly salary ranges for each grade. The table is available for public review, accessible from the RMWD website, and is published on a website hosted by the California State Controller.

On June 28, 2017, the Board approved the current salary grades in Resolution No. 17-17, which included Legacy Salary Grades for certain positions if an incumbent employee's pay rate was above the proposed new grade for that position. Since that time, one employee has received a performance evaluation and merit increase that had been due under the terms of the previous Memorandum of Understanding and previous grade structure. This retro-active increase put his rate above the new salary grade; therefore, one position needs to be added to the Legacy Salary Grades. Per the terms of the current Memorandums of Understanding, the Legacy Salary grades will not increase in future years with cost of living adjustments.

In addition, the General Manager's current contract calls for a cost of living adjustment based on the increase in the most recently published CPI-U for San Diego County for the most recent 12-month period for which data is available. The General Manager's performance evaluation is due August 28, 2017 and any merit based compensation adjustments are at the Board's discretion.

DESCRIPTION

The grade structure included in Resolution No. 17-24 is revised to reflect a new salary grade for the General Manager and adds one Legacy Salary Grade for a Utility Worker I – Construction & Maintenance. Resolution No. 17-24 rescinds Resolution No. 17-17.

Staff has prepared two draft resolutions for the Board's consideration:

Draft A of Resolution No. 17-24 lists a fixed monthly rate for the General Manager per the Cost of Living Adjustment (COLA) required in the General Manager's contract.

Draft B of Resolution No. 17-24 lists a Salary Grade and Range for the General Manager that is based on the Human Resources Manager's analysis of current labor market rates for General Managers' salaries from the following data sources: the current pay data of General Managers from ten local water

agencies and four cities; survey data from the Economic Research Institute (ERI); and the 2016 California Special District Association (CSDA) Administrative Salary and Benefits Survey.

The benefit of defining a range for the General Manager's salary, rather than listing the fixed monthly rate, is that a new resolution would not be necessary every time the General Manager's pay is changed. Resolution No. 17-24 does not directly adjust the General Manager's pay rate; actual compensation and benefits adjustments for the General Manager would be determined through separate Board action in accordance with California Government Code §54953(c)(3).

POLICY/STRATEGIC PLAN KEY FOCUS AREA

Updating this document with current information allows the District to comply with CalPERS requirements and California Code of Regulations 570.5 and 571.

BOARD OPTIONS/FISCAL IMPACTS

There is no direct fiscal impact. Resolution No. 17-24 does not directly adjust the General Manager's or any employee's pay rate; it allows the District to comply with CalPERS requirements and California Code of Regulations 570.5 and 571.

1. Option 1: Approve Resolution No. 17-24 as presented in Draft A.
2. Option 2: Approve Resolution No. 17-24 as presented in Draft B.

STAFF RECOMMENDATION

Staff recommends approval of Draft B of Resolution No. 17-24.

Karleen Harp, COSM 08/22/2017
Human Resources Manager

DRAFT

RESOLUTION NO. 17-24

RESOLUTION OF THE BOARD OF DIRECTORS OF RAINBOW MUNICPIAL WATER DISTRICT ESTABLISHING CLASSIFICATIONS AND MONTHLY RATES OF PAY FOR DISTRICT EMPLOYEES EFFECTIVE AUGUST 28, 2017 THROUGH JUNE 30, 2018

Exempt Salary Grade	Monthly Salary Range/ Biweekly Range	Job Titles
GM	**$17,077.50 /** $8,343.46	General Manager
E11	**$10,066 - $14,495 /** $4,645 - $6,690	Engineering Manager Finance Manager Operations Manager
E10	**$8,753 - $12,691 /** $4,040 – $5,857	Human Resources Manager
E9	**$7,611 - $11,036 /** $3,513 - $5,094	Associate Engineer Construction and Maintenance Superintendent Water Operations Superintendent
E8	**$6,618 - $9,596 /** $3,054 - $4,429	Information Technology Administrator Wastewater Superintendent

Non-Exempt Salary Grade	Monthly Salary Range/ Hourly Range	Job Titles
N7	**$6,316 - $9,159 /** $36.44 - $52.84	Executive Assistant/Board Secretary
N6	**$5,493 - $7,964 /** $31.69 - $45.95	Administrative Analyst Crew Leader – Valve Maintenance Crew Leader – Construction & Maintenance Electronic / Electrical Technician II System Operator III
N5	**$4,776 - $6,925 /** $27.55 - $39.95	Accounting Specialist II Crew Leader – Meter Services Electrical / Electronics Technician I Engineering Inspector II Engineering Technician II Mechanic II Purchasing / Warehouse Technician II Safety Administrator II System Operator II Utility Worker III – Construction Utility Worker III – Valve Maintenance Utility Worker III – Wastewater Services Water Quality Technician II

DRAFT

N4	**$4,153 - $6,022 /** $23.96 - $35.25	Accounting Specialist I Administrative Assistant II Engineering Inspector I Engineering Technician I Safety Administrator I System Operator I Utility Worker II – Construction Utility Worker II/III – Meter Services Utility Worker II – Valve Maintenance Utility Worker II – Wastewater Services Water Quality Technician I
N3	**$3,611 - $5,237 /** $20.83 - $30.21	Administrative Assistant I Customer Service Representative II Purchasing / Warehouse Technician I Utility Worker I – Construction Utility Worker I – Meter Services Utility Worker I – Valve Maintenance Utility Worker I – Wastewater Services
N2	**$3,140 - $4,554 /** $18.11 - $26.27	Customer Service Representative I
N1	**$2,731 - $3,960 /** $15.76 - $22.85	Interns

Legacy Salary Grade	Monthly Salary Range/ Hourly Range	Job Titles
L7	**$6,252-$8,203 /** $32.91 - $47.33	Crew Leader- Valve Maintenance
L6	**$4,982-$6,536 /** $28.74 - $37.71	Engineering Inspector I
L5	**$4,884-$6,408 /** $28.18 - $36.97	Utility Worker III – Meter Services
L3	**$4,425-$5,805 /** $25.53 - $36.28	Purchasing/Warehouse Technician I
L2	**$4,089-$5,365 /** $23.59 - $30.95	Utility Worker I - Construction

Resolution No. 17-24 rescinds Resolution No. 17-17.

DRAFT

PASSED, APPROVED, AND ADOPTED in Open Session at a meeting of the Board of Directors of the Rainbow Municipal Water District held on the 22nd day of August 2017 by the following vote, to wit:

AYES:
NOES:
ABSENT:
ABSTAIN:

_____
Helene Brazier, Board President

ATTEST:

_____
Dawn Washburn, Board Secretary

DRAFT B

RESOLUTION NO. 17-24

RESOLUTION OF THE BOARD OF DIRECTORS OF RAINBOW MUNICPIAL WATER DISTRICT ESTABLISHING CLASSIFICATIONS AND MONTHLY RATES OF PAY FOR DISTRICT EMPLOYEES EFFECTIVE AUGUST 28, 2017 THROUGH JUNE 30, 2018

Exempt Salary Grade	Monthly Salary Range/ Biweekly Range	Job Titles
GM	**$15,069- $21,700/** $6,955 - $10,015	General Manager
E11	**$10,066 - $14,495 /** $4,645 - $6,690	Engineering Manager Finance Manager Operations Manager
E10	**$8,753 - $12,691 /** $4,040 – $5,857	Human Resources Manager
E9	**$7,611 - $11,036 /** $3,513 - $5,094	Associate Engineer Construction and Maintenance Superintendent Water Operations Superintendent
E8	**$6,618 - $9,596 /** $3,054 - $4,429	Information Technology Administrator Wastewater Superintendent

Non-Exempt Salary Grade	Monthly Salary Range/ Hourly Range	Job Titles
N7	**$6,316 - $9,159 /** $36.44 - $52.84	Executive Assistant/Board Secretary
N6	**$5,493 - $7,964 /** $31.69 - $45.95	Administrative Analyst Crew Leader – Valve Maintenance Crew Leader – Construction & Maintenance Electronic / Electrical Technician II System Operator III
N5	**$4,776 - $6,925 /** $27.55 - $39.95	Accounting Specialist II Crew Leader – Meter Services Electrical / Electronics Technician I Engineering Inspector II Engineering Technician II Mechanic II Purchasing / Warehouse Technician II Safety Administrator II System Operator II Utility Worker III – Construction Utility Worker III – Valve Maintenance Utility Worker III – Wastewater Services Water Quality Technician II

DRAFT B

N4	**$4,153 - $6,022 /** $23.96 - $35.25	Accounting Specialist I Administrative Assistant II Engineering Inspector I Engineering Technician I Safety Administrator I System Operator I Utility Worker II – Construction Utility Worker II/III – Meter Services Utility Worker II – Valve Maintenance Utility Worker II – Wastewater Services Water Quality Technician I
N3	**$3,611 - $5,237 /** $20.83 - $30.21	Administrative Assistant I Customer Service Representative II Purchasing / Warehouse Technician I Utility Worker I – Construction Utility Worker I – Meter Services Utility Worker I – Valve Maintenance Utility Worker I – Wastewater Services
N2	**$3,140 - $4,554 /** $18.11 - $26.27	Customer Service Representative I
N1	**$2,731 - $3,960 /** $15.76 - $22.85	Interns

Legacy Salary Grade	Monthly Salary Range/ Hourly Range	Job Titles
L7	**$6,252-$8,203 /** $32.91 - $47.33	Crew Leader- Valve Maintenance
L6	**$4,982-$6,536 /** $28.74 - $37.71	Engineering Inspector I
L5	**$4,884-$6,408 /** $28.18 - $36.97	Utility Worker III – Meter Services
L3	**$4,425-$5,805 /** $25.53 - $36.28	Purchasing/Warehouse Technician I
L2	**$4,089-$5,365 /** $23.59 - $30.95	Utility Worker I - Construction

Resolution No. 17-24 rescinds Resolution No. 17-17.

DRAFT B

PASSED, APPROVED, AND ADOPTED in Open Session at a meeting of the Board of Directors of the Rainbow Municipal Water District held on the 22nd day of August 2017 by the following vote, to wit:

AYES:
NOES:
ABSENT:
ABSTAIN:

_____
Helene Brazier, Board President

ATTEST:

_____
Dawn Washburn, Board Secretary

RAINBOW MUNICIPAL WATER DISTRICT
Committed to Excellence

BOARD ACTION

BOARD OF DIRECTORS

August 22, 2017

SUBJECT

DISCUSSION AND POSSIBLE ACTION REGARDING THE APPOINTMENT; EMPLOYMENT; EVALUATION OF PERFORMANCE; OR COMPENSATION OF THE ***GENERAL MANAGER***

BACKGROUND

The General Manager's contract includes a provision for annual cost of living adjustments based on the change in CPI-U for San Diego County for the most recent 12-month period for which data is available.

First half 2016 CPI-U for San Diego County was 272.628
First half 2017 CPI-U for San Diego County was 281.561

Percentage of change for 12 months = 3.3%

Source: https://www.bls.gov/regions/west/news-release/consumerpriceindex_sandiego.htm#table1

The Board has discretion to make additional compensation changes based on the performance evaluation of the General Manager.

DESCRIPTION

The Board may take action regarding the appointment, employment, performance or compensation of the General Manager.

POLICY/STRATEGIC PLAN KEY FOCUS AREA

California Government Code §54953(c)(3) requires that prior to taking final action, the Board shall orally report a summary of the recommendation for a final action on the salaries or compensation paid in the form of fringe benefits of a local agency executive during the open meeting in which the final action is to be taken.

BOARD OPTIONS/FISCAL IMPACTS

A member of the Board shall orally report the summary of the recommendations before taking action.

Option 1 Recommendation:
"Approve an increase to the General Manager's salary by a 3.3% cost of living adjustment in accordance with the existing contract between Rainbow Municipal Water District and Tom Kennedy. The General Manager's annual Salary will increase from $210,000 to $216,930 beginning August 28, 2017."

Option 2 Recommendation:
Alternative recommendations are at the discretion of the Board and shall be orally reported before taking action.

STAFF RECOMMENDATION

Staff defers to the Board for discussion and possible action.

Karleen Harp, COSM
Human Resources Manager

August 22, 2017

RAINBOW MUNICIPAL WATER DISTRICT
Committed to Excellence

BOARD ACTION

BOARD OF DIRECTORS

August 22, 2017

SUBJECT

CONSIDER CHANGE ORDER WITH INFOR PUBLIC SECTOR FOR THE PROCUREMENT OF UTILITY BILLING SOFTWARE, SOFTWARE HOSTING, AND SOFTWARE SUPPORT AND IMPLEMENTATION SERVICES

DESCRIPTION

This agenda item is to consider approval of a change order with Infor Public Sector (hereafter Infor) for the procurement of Customer Relationship Management (CRM) and Utility Billing (UB) software from Infor. This software would replace the CRM and UB components of the current financial software package from Accela Springbrook.

BACKGROUND

In 2014 the District was notified that our then financial and UB software provider (Datastream Business Solutions) was being bought by Springbrook (who was in turn acquired by Accela several months after we switched platforms). We were notified that the sunset date for support the Datastream product was June 2016. Springbrook offered heavy discounts on data conversion costs as an incentive to move to their product. The District also had few options other than this move because the time it would take to evaluate other options and perform a roughly 18-month transition process would exceed the time left in support for our old package. In November 2014, the District Board authorized a contract in the amount of $95,000 for the implementation of the software and an ongoing annual subscription fee of $60,000.

Implementation took longer than expected with the financial packages going live in Spring 2016 and the utility billing package in the Fall of 2016. Significant challenges were identified with the software almost immediately, including but not limited to:

- Very slow performance.
- Extremely poor reporting functions that were well below what was promised.
- Inflexibility in dealing with datasets and screen customization.
- No ability to add custom fields that could be used in reporting.
- Very, very poor customer service (this cannot be overstated).
- Inability to link with our GIS and EAM software (a specific requirement of the contract).

Based on the issues we have experienced, the Finance Department staff has indicated that even though the transition process is painful, they would gladly go through the pain again in order to move to a better software platform.

Software Integration and IT Strategy

In July, 2016 the Board considered a presentation by Staff on the objectives of our IT strategies in which we detailed how the various systems were being designed to work together. A key component of this integration strategy was to manage impending future growth (>30% increase in water accounts and nearly 100% increase in sewer accounts) within our current staffing levels. Our information systems at the time had no interconnectivity that would allow for more flexible and efficient dispatching of work to field crews. The contracts with our EAM, GIS and Finance/UB vendors all required interfaces that allowed for free data exchanges.

We have a significant opportunity to more effectively distribute field work among different functional groups that is predicated on the UB system being able to integrate with the EAM and GIS work management systems. In the absence of integrated work management, we frequently dispatch more than one truck to remote areas to do work when one may have been able to do both tasks effectively. Based on data collected on drive time in the EAM, if we can reduce drive time by as little as 20% it will free up the equivalent of over a full-time position (value ~$100K/yr). Integrating our dispatching processes will allow other field staff to perform simple tasks (such as getting missed reads, etc) that we now send meter readers out to get. As we grow, customer service demands will increase and unless we become more efficient in our dispatching practices we will need more staff to meet future demands.

Over the last year, we have completed the integration of the EAM and GIS and this system is working well. Field crews have iPads that have seamless connectivity to the EAM so that work orders appear on the map. This allows for crews to see what work is near them so that they can complete those tasks while they are in the area rather than have someone else come out. We have even deployed this system for our backflow contractor who now uses this GIS to EAM system to perform backflow inspections and send the records into the EAM from the field. To date they have performed nearly 3,000 inspections using this system will each record transmitted from the field to our EAM via the iPad.

When we tried to integrate with Springbrook using the Application Programming Interfaces (APIs) that they had provided to us, we were told that we could not use them due to our system being a hosted environment. In addition, when our other vendors reviewed the APIs they were found to be unsuitable for our use. Apart from all the other deficiencies with Springbrook, the lack of data integration capability makes this system incompatible with our IT integration strategy.

Current Options Available in Marketplace

Staff has been reviewing the various software packages used by other agencies in our area and there is a wide variety of systems in use. There is a fundamental challenge for midsized agencies with respect to this type of software. Software packages designed for smaller agencies are generally of lower quality and have markedly lower levels of support. The packages are generally several years behind in terms of modern software standards and the vendors have slower to nonexistent upgrade paths. Lower level packages also have less robust integration capabilities, limiting their usefulness within our IT integration strategy.

For these sorts of software packages to work well, they generally require the software to be installed locally on servers and have a skilled staff person to customize the software. This is how Valley Center MWD is getting a better result with Springbrook than we are, but we lack the staff capacity to perform these customizations. Further, our business model is geared toward outsourcing our IT into the cloud as localized customizations made by an individual presents significant risks of business continuity should that person separate from employment for any reason.

Software packages that are designed for midsized to larger organizations tends to have more advanced features, better support systems, and more robust upgrade paths. The next level software vendors' offerings have better reporting flexibility and in most cases, are now almost entirely cloud based systems.

The challenge is that these higher-level software packages are more expensive than the lower level packages.

Finance and UB Software Replacement Options

We are using a two-pronged approach to the replacement of the Finance and UB software. Since these systems have only a monthly transfer of cash it is not a requirement that both systems be from the same vendor (although it is preferred). When we evaluated the magnitude of the daily inefficiencies that are created by the problems with Springbrook, the day to day interactions of our Customer Services staff and our meter crews was identified as having the greatest immediate impact. Further, the labor savings from the integrated work dispatching will come from the UB service order functions rather than from the general ledger functions. For these reasons, the UB component was selected as the first part of Springbrook to be replaced.

There are several vendors in the marketplace for UB systems that could meet our needs overall. We began our review of options with the following in mind:

- Robust integration capabilities with EAM.
- Customization capabilities by end users.
- Native Cloud-Based system (not an improvised on-premise database with an internet connection).
- Modern database structure and programming language.
- Speed of system.
- Mobile capabilities for field work.
- Robust real time Customer Payment Portal.
- Excellent product support.

Based on these parameters, and on our excellent experience with Infor EAM, staff recommends selecting Infor Public Sector (IPS) Utility Billing. Formerly named Hansen Utility Billing, IPS has been rearchitected from the ground up over the last several years to meet all the requirements stated above. Further, being from the same vendor, the integration with EAM is native to the software rather than something that we will need a third-party middleware to accomplish. As noted above, tightly integrated work scheduling will provide the best ROI for any of these systems, so IPS will produce that result better than third party solutions.

Staff has conducted three demo sessions with IPS over the last several weeks and is satisfied with the feature set and other aspects of the software. This system will be a massive upgrade from Springbrook and will save many hours of staff time per week, allowing us to handle more customer accounts with the same level of staffing.

Finance Software Replacement Options

Since the UB and Finance software do not need to be managed by the same company, and should not be upgraded simultaneously, staff is currently in the process of evaluating vendors for this transition as well. Infor does have an extremely robust finance software package, but the licensing fees may be cost prohibitive for our agency. The software would allow for seamless integration across all our software functions which would be great, but the costs may be too high. We are in discussions with Infor on how to bring those costs down but as of the writing of this memo, they are still higher than what we would need to get an acceptable ROI. As noted above, the UB and EAM have a much higher impact on overall staff productivity as they are used by many more employees. The finance software is only used by a handful of staff and while having all the excellent features would help produce better workflows and reporting, the ROI is trickier to establish.

Staff is working with Elsinore Valley Water District, who has implemented the Infor Cloudsuite finance software, to get a real-world feel for how this software is working in practice. There may be creative licensing options that could allow "sharing" of licenses through cooperative agreements. We are also working on an option to do some bulk licensing through CSDA which would help with these costs. It is unclear at this time whether any of these efforts will come to fruition.

Since the replacement of the UB system will take 6-8 months to complete, the decision point for finance software replacement is several months out. During this time, staff will work with the Budget and Finance Committee on possible replacement options and bring an agenda item to the Board for approval at a later date.

POLICY/STRATEGIC PLAN KEY FOCUS AREA

Key Focus Area 4 – Fiscal Responsibility - Complete transition to new financial software.
Key Focus Area 5 – Customer Service – Expanding options for on-line Bill Pay plus enhancing capabilities of field customer service through geographic dispatching and information systems.

BOARD OPTIONS/FISCAL IMPACTS

The annual software licensing, hosting, and support costs for the Utility Billing software is $44,366.40. Funds are available for this purchase in the General Fund Professional Services budget. Costs will be allocated between water, wastewater and general funds through our normal cost allocation methods. Since we already have a contract with Infor that has been through legal counsel review, this will be handled as a change order to that contract.

There will be some additional implementation costs to get this software up and running. Staff is evaluating the use of Infor staff (more expensive) or third party implementation firms (less expensive). Our estimate for these one-time services is in the range of $15,000 to $20,000.

STAFF RECOMMENDATION

The Board has several options:

1. Approve a change order with Infor Public Sector, Inc. for the procurement of IPS Utility Billing Software in the amount of $44,366.40.
2. Direct staff to evaluate other options further and bring them back for Board consideration.
3. Continue the use of the Springbrook software package.

Staff recommends option 1.

Tom Kennedy
General Manager

August 22, 2017

SaaS Order Form

This Order Form is subject to the terms of the Subscription License and Services Agreement between **Infor Public Sector Inc.** ("Infor") and **Rainbow Municipal Water District** ("Licensee") with an effective date of 1/27/2016 (the "Agreement"). All terms of the Agreement are incorporated herein by reference. In the event of a conflict, the terms of this Order Form control over the terms of the Agreement.

Capitalized terms not defined in this Order Form are defined in the Agreement. In the event the capitalized terms in this Order Form differ from the terminology used in the Agreement, references herein to: "Subscription Software" and "Component Systems" shall have the same meaning, refer to the computer software programs identified this Order Form and may be referred to in the Agreement as Component Systems, Products, Software Products, Subscription Software, Software, Standard Software, Programs or Licensed Programs; "Support" may be referred to in the Agreement as Support, Maintenance and Support, Annual Support, Support Services, On-Going Support or One Point Support; and "License Restriction" means any limitation on the use of the Subscription Software and may be referred to in the Agreement as License Restriction or User Restriction.

I. Subscription Software

	Part # (if applicable)	Subscription Software	License Restriction*		Support Level**
			Quantity	Type	
1	HAN-S-H8UBB	Infor Public Sector Suite - Utility Billing Bundle Subscription	25,000	ACCT	CXTP
2	HAN-S-H8CIS	Infor Public Sector Suite - CIS Billing Subscription	25,000	ACCT	CXTP
3	HAN-S-O311	Infor Public Sector Suite - Open 311 API Subscription	25,000	NU	CXTP
4	HAN-S-MEXC	Infor Public Sector Suite - Microsoft Exchange Subscription	25,000	NU	CXTP
5	HAN-S-H8CWS	Infor Public Sector Suite - CDR Web Services Subscription	25,000	NU	CXTP
6	HAN-S-H8AWS	Infor Public Sector Suite - Assets Web Services Subscription	25,000	NU	CXTP
7	HAN-S-H8BWS	Infor Public Sector Suite - Billing Web Services Subscription	25,000	NU	CXTP
8	HAN-S-HDYP-CS-RESP	Infor Public Sector Suite Dynamic Portal for Customer Service - Responsive Design Subscription	100,000	POP	CXTP
9	HAN-S-HDYP-UB-RD	Infor Public Sector Suite Dynamic Portal for Util. Billing Responsive Design Subscription	25,000	ACCT	CXTP
10	HAN-S-H8AWMM	Infor Public Sector Suite - Water Meter Management Subscription	50	NU	CXTP

For the purpose of the definitions below, Component System and Subscription Software may be used interchangeably.

* If specified in the User Restriction field:

"**ACCT**" = **Accounts** - Quantity represents the number of billable customers, residential or commercial, which are invoiced by the Component System.

"**NU**" = **Named Users** - Allows access to the Component System up to the stated maximum number of individual named users, irrespective as to whether any such user is actively logged on to the Component Systems at a given point in time; The Licensee agrees to assign to each Named User a unique identification profile, it being agreed that to the extent Licensee uses generic user profiles as a means to access the Component System, each separate log-on accessing the Component System will be counted as a separate user.

"**POP**" = **Population** - Quantity represents the maximum number of persons who reside within the jurisdiction of Licensee and an increase in population which exceeds the Quantity specified will carry additional License and Support Fees.

****Support Level for Subscription Software:**

CXTP = Subscription Services: Essential Support and Critical Incident Support ("CIS") Subscription Support – During the Subscription Term specified, Licensee is eligible to receive the standard Infor Subscription Services for Support which it makes generally available to its subscription customers, and in addition, customer is eligible to receive CIS 24 hours a day x 7 days a week support for severity 1 issues. A severity 1 level incident means that your production system is not available or that the production system is available but a critical application failure has occurred and business processes are halted, and no workarounds are available. Additional information regarding Subscription Services support may be found at: http://www.infor.com/cloud/subscription/

II. Subscription Term and Subscription Fees

Additional Annual Subscription Fee: $44,366.40

Initial Subscription Term: Order Form Date through 3 years from Order Form Date.

Fee for Initial Subscription Term: **$ 133,099.20**

Annual Escalation Percentage Cap for Renewal Terms: For the first two annual renewals immediately following the Initial Subscription Term, the Annual Escalation Percentage Cap shall 5% or the then-current year-over-year increase in the Consumer Price Index (CPI-U), whichever is greater.

Total Amount Due (before applicable taxes): **$ 133,099.20**

Unless otherwise specified all amounts are in United States Dollar

Currency: USD

III. Payment Terms:

Annual Payment Terms:

Licensee shall pay the Annual Subscription Fee, in advance, as invoiced by Infor. The first Annual Subscription Fee, plus applicable taxes, will be invoiced promptly upon the Order Form Date. All other Annual Subscription Fees will be invoiced such that they are due prior to the commencement of the portion of the Subscription Term to which the Annual Subscription Fee applies. Licensee shall pay all invoices within 15 days of the date of the invoice.

Licensee Account ID:	100044948
Infor GL ID:	US06A
Account Executive Name:	Steve Bury

Primary-use Address:	**Invoice Address:**
Rainbow Municipal Water District 3707 Old Highway 395 Fallbrook, CA 92028-9372 USA	Rainbow Municipal Water District 3707 Old Highway 395 Fallbrook, CA 92028-9372 USA
Contact Name: Tom Kennedy	Contact Name: Tom Kennedy
Contact Title:	Contact Title:
Contact Phone: 760-728-1178	Contact Phone: 760-728-1178
Contact email: tkennedy@rainbowmwd.com	Contact email: tkennedy@rainbowmwd.com

IV. Additional Terms

Exhibit 1 –Service Level Description is attached to and made a part of this Order Form.

In consideration for the pricing and terms under this order form, Infor may make reference to Licensee as a customer in press releases and written and verbal communications. Licensee agrees to act as a reference for Infor, including participating in reference calls and other reference activities as may be reasonably requested by Infor.

Licensee's purchase of the licenses specified herein is not contingent or dependent upon the provision of any consulting services Licensee may choose to purchase from Infor contemporaneously with this Order Form or in the future.

"No changes or modifications of any kind to this Order Form shall be accepted after execution unless signed in writing by both parties

Any purchase order or similar document (other than a mutually executed and delivered Order Form) that may be issued by the undersigned Licensee in connection with this Order Form does not modify this Order Form or the Agreement to which it pertains. No such modification will be effective unless it is in writing, is signed by each party, and expressly provides that it amends this Order Form (or as applicable, the Agreement).

For U.S. Government entities, the following restricted rights clause applies: This Component System is a "commercial component," as this term is defined in 48 C.F.R. 2.101, consisting of "commercial computer software" and "computer software documentation," as such terms are defined in 48 C.F.R. 252.227-7014(a)(I) and 48 C.F.R. 252.227-7014(a)(5), respectively, and used in 48 C.F.R. 12.212 and 48 C.F.R. 227.2702, as applicable, and all as amended from time to time. Consistent with 48 C.F.R. 12.212 and 48 C.F.R. 227.7202, and other relevant sections of the Code of Federal Regulations, as applicable, and all as amended from time to time, all U.S. Government entities acquire this Component System only with those rights set forth in the license agreement accompanying this Component System. Use, duplication, reproduction, or transfer of this commercial software and accompanying documentation is restricted in accordance with FAR 12.212 and DFARS 227.7202 and by a license agreement.

By signing this Order Form, Licensee represents and warrants that it has obtained all necessary authorizations and approvals including, but not limited to, appropriation of funds and budget approval.

Effective date of this Order Form: _____ (the "Order Form Date"), to be completed by Infor upon countersignature.

THE PARTIES have executed this Order Form through the signatures of their respective authorized representatives.

for: **Infor Public Sector Inc.**	for: **Rainbow Municipal Water District** (Licensee)
Signature	Signature
Typed or Printed Name	Typed or Printed Name
Title / Date	Title / Date

Exhibit 1 to SaaS Order Form

Service Level Description

Infrastructure - The services are supported by commercially reasonable redundant infrastructure including

- Power infrastructure that includes redundant sources (multiple power feeds, generators, battery backups), multiple power distribution systems, and redundant power supplies;
- Environmental controls that include highly available precision HVAC systems, humidity controls, and water detection systems;
- Network infrastructure that includes multiple Internet Service Providers, redundant edge routers, firewalls, and switches;
- Hardware and software redundancy in support of virtualized and physical servers; and
- Storage solutions that provide redundant back end data storage.

Infor maintains a disaster recovery site where Licensee's data is replicated on a regular basis.

Technical Change Management – Infor maintains change management system to ensure review and controlled implementation of changes that Infor may make from time to time in the support of the services. Changes require both a risk analysis and a peer review before being implemented in Infor's infrastructure.

Cloud Storage - Infor Subscription Software solutions include two (2) terabytes of storage at no additional charge. This storage limitation is for the Licensee's production environment only and applies to each Infor CloudSuite or Subscription Software product line, regardless of whether they are subscribed for on a single Order Form or across multiple Order Forms.

Security & Privacy – Infor takes great care to protect non-public information provided to us by our customers. Infor may have access to non-public information from multiple sources that include:

- Directly from use of one of Infor's hosted applications.
- Directly from a customer's designated service representative or indirectly via batch data transfers.
- In the course of transactional activities as information is updated or processed by an Infor hosted application, or through data maintenance activities.
- Other sources as defined by one of our solutions.

Infor has implemented a defense-in-depth strategy to protect non-public information. This strategy is based upon best-practices designed to comply with applicable laws and regulations and is based upon widely accepted industry standards. Our security management system is based on the following:

- Security Policies: We require that all employees be responsible for the security of non-public information and follow the practices defined within the Information Security Management System.
- Information Security Organization: Infor's management is committed to security and has established an organization responsible for the security of non-public information.
- Asset Management: All assets are strictly controlled and all information is classified in order to determine the appropriate controls required for access and handling.
- Human Resources Security Practices: In the US, Infor conducts a comprehensive background check and screening at the time each employee is hired and requires that employees maintain familiarity and compliance with security responsibilities. When employees leave Infor, a formal process is established to remove their physical and virtual access to the Infor infrastructure.
- Physical and Environmental Security: Infor places critical components in physically controlled spaces with best-practices in place to secure infrastructure. Physical and environmental security measures include card and/or biometric access controls, and limited access to secure locations based on job function.
- Access Control: All access to systems, networks, and applications is controlled down to the user and resource level with role-based privilege techniques. This access is reviewed on a periodic basis to ensure that a change of personnel or a change of role has not modified the access needs of the individual.
- Communication and Operations Management: Infor has implemented strong operational procedures to protect information. Our controls surrounding system planning, protection from malicious code, backup processes, network security, media handling and exchange of information are constantly being analyzed and monitored to insure they provide reasonable protection for your data.

Third party service providers with access to confidential information are required to adhere to security and privacy requirements that are consistent with and at least as restrictive as Infor's own policies and procedures regarding the protection of confidential information.

- System Development: Security requirements of all applications that handle confidential information are defined early in the development stage. Appropriate data protection techniques are designed into the application while changes to developed software must go through a mature change management process.
- Incident Management: In the unlikely event of an actual or reasonably suspected security incident, our teams immediately begin work to identify the scope of impact, mitigate any exposure, determine the root cause of the incident and take appropriate corrective action.
- Compliance: We are constantly analyzing the requirements of legal, regulatory, and contractual obligations to ensure we are abiding by the requirements that apply to the handling of your data.

Scheduled Maintenance – The services shall be subject to a regularly scheduled weekly maintenance window. Infor makes commercially reasonable efforts to establish maintenance windows during times that minimize impact to Licensee's users. While most of Infor's maintenance can be completed during regularly scheduled maintenance windows, from time to time maintenance must be performed outside of the scheduled maintenance windows to maintain the integrity and security of the services. In such cases, Infor will provide Licensee's primary point of contact as much advance notice of the planned maintenance as is technically feasible. The regularly scheduled weekly maintenance windows and any period of unavailability due to maintenance for which Licensee is given at least 24 hours advance notice is considered "Scheduled Maintenance".

Availability – Infor's goal is to provide access to the services at Infor's Internet gateway(s) twenty-four hours per day, seven days a week, except during Scheduled Maintenance. Infor's service level objective is 99.5% Availability measured on a monthly basis.

Availability for the Subscription Services is measured monthly as a percentage of Scheduled Available Minutes.

- "Scheduled Available Minutes" are the total minutes in a month less the number of Scheduled Maintenance minutes in the applicable month.
- "Available Minutes" is the number of Scheduled Available Minutes in a month less the aggregate number of minutes the Subscription Services were unavailable outside of Scheduled Maintenance.
- "Availability" is a percentage calculated as the Available Minutes in a month divided by the Scheduled Available Minutes in the month.

For example, in a 30 day month with 4 weekly Scheduled Maintenance windows of 8 hours, there are 41,280 Scheduled Available Minutes ((60 min. x 24 hrs. x 30 days)-(60 min. x 8 hrs. x 4 weeks) = 41,280). If the Subscription Services experienced an outage of two hours outside of Schedule Maintenance, there were 41,160 Available Minutes in the month (41,280 Scheduled Available Minutes – 120 minutes of unavailability). The resulting Availability percentage is 41,160 / 41,280 = 99.7%.

The following shall not be considered periods of unavailability for purposes of the Availability calculation:

- Outages due to factors outside of Infor's reasonable control (for example, a network or device failure at Licensee's site or between Licensee and Infor's data centers);
- Delays in email or webmail transmission to or from the hosted application;
- Connectivity issues outside of Infor's direct control (e.g. DNS issues);
- Force Majeure events;
- Outages attributable to the acts or omissions of Licensee or Licensee's employees, agents, contractors, or vendors, or anyone gaining access to the services means of UserIDs or equipment controlled by Licensee;
- Periods of Down Time at Licensee's request;
- Outages that result from Licensee's equipment, software, or other technology and/or third party equipment, software or other technology (other than those which are under Infor's direct control); and
- Performance degradation due to Licensee's use of the services in excess of the scope of Licensee's license, usage restrictions, or product limitations outlined in the applicable Agreement.

MEETINGS/SEMINARS/CONFERENCES/WORKSHOPS

VARIABLE					
DATE	**2017**	**MEETING**	**LOCATION**	**ATTENDEES**	**POST**
September	14	SDCWA Special Board Meeting	SDCWA	GM	N/A
September	*	CSDA – San Diego Chapter	(Location to be Announced) 6:00 p.m.	Mack	N/A
September	*	LAFCO Special Meeting	County Admin Center, Room 302 – 9:30am	(As Advised by GM)	N/A
September	27	Santa Margarita Watershed Council	Rancho California Water District	Hamilton	N/A

* To Be Announced

MEETINGS/SEMINARS/CONFERENCES/WORKSHOPS

RECURRING					
DATE	**2017**	**MEETING**	**LOCATION**	**ATTENDEES**	**POST**
September	6	Engineering Committee Meeting	RMWD Board Room 3:00 p.m.	Appointed Director, General Manager	8/30
September	11	LAFCO	County Admin. Center Room 302 9:00 am	As Advised by GM	N/A
September	11	Communications Committee Mtg.	RMWD Board Room 3:30 p.m.	Appointed Director, General Manager	8/30
September	12	Budget & Finance Committee Mtg.	RMWD Board Room 1:00 p.m.	Appointed Director, General Manager	8/30
September	15	LAFCO Advisory Committee	LAFCO, 9335 Hazard Way, 9:30 a.m.	General Manager	N/A
September	15	NC Managers	Golden Egg 7:45 a.m.	General Manager	N/A
September	19	SDCWA GM's Meeting	SDCWA, San Diego 9:30 a.m.	General Manager	N/A
September	19	Council of Water Utilities	Stoneridge Country Club 7:15 a.m. Poway	All Directors, General Manager	9/14
September	26	RMWD General Board	RMWD Board Room (Start Time to Be Determined)	All Directors	9/14
September	27	North County Water Group	Rincon Del Diablo, Escondido 7:30 a.m.	All Directors on a Rotating Schedule, General Manager	N/A
September	27	San Luis Rey Watershed Council	Pala Administration Building 1:00 p.m.	Stewart	N/A
September	28	SDCWA Full Board Meeting	SDCWA Board Room, 3-5 p.m.	General Manager	N/A

July 29, 2017

Rainbow Water District

Board of Directors

Dear Members of the Water Board,

Recently my neighbor and I reported a water problem in our homes. The water was yellowish and we called the office to ask for help at around 1:30 in the afternoon I think. Toni, took the report of our problem, our addresses and promised we would have help before the end of the day. Within less than an hour, two polite and concerned servicemen arrived, Chris and Steve. They assessed our problem, told us exactly what they would be doing, what we would need to do after they took care of the problem. Within a very short time, the situation was taken care of and we were very pleased. We wanted you to know that two of your customers on Arboles Court were very impressed with the entire event. Your office staff member, Toni, and the repairmen, Chris and Steve, deserve kudos for their professionalism, sense of humor and politeness. Thank you, Toni, Chris, and Steve.

Sincerely yours,

Genie Summers Marilyn Kimbrell

Genie Summers Marilyn Kimbrell

RAINBOW MUNICIPAL WATER DISTRICT
Committed to Excellence

BOARD INFORMATION

BOARD OF DIRECTORS

August 22, 2017

SUBJECT

Operations Report for July 2017

DESCRIPTION

Activities for Operations & Maintenance Division

CONSTRUCTION & MAINTENANCE:

The Valve Maintenance crew exercised a total of 79 valves this month due to other emergencies, and supported Engineering with ongoing projects. The crew assisted with four (4) planned shutdowns for the Construction crew. They also performed maintenance on three (3) PRV stations as well as completed 118 Dig Alert tickets/mark-outs for the District.

The Construction crews repaired eleven (11) leaks, which seven (7) were water mains and four (4) service leaks. The crew performed seventeen (7) planned/emergency shutdowns. They also installed and/or repaired three (3) appurtenances. The crews maintained District easements as well as completed work at the District Yard. The pressure station in the Vista Valley community is in progress as well. Some of the C&M staff also assisted the Meter and Wastewater crews.

The District's mechanic completed a total of (41) District vehicles with regular *scheduled* preventative maintenance and/or repairs. All repairs and maintenance were logged into the Mitchel program. The following maintenance and/or repairs were considered *unscheduled*:

- DOT BIT Inspections were performed on the required (13) vehicles and trailers and Logged as required.
- Vehicles with Emergency Repairs (8)
- Small Equipment (1)
- Off-Road Equipment / Trailers Repairs & Maintenance (8)
- Off-Road Equipment / Trailer Emergency Repairs (1)
- Large Vehicles Maintenance / Repairs (7)
- Large Equipment Emergency Repairs (3)
- Safety Recalls (1)

WATER OPERATIONS:

- Completed 13 monthly tank and 3 reservoir cover inspections.
- Completed weed abatement at North Reservoir.

- Completed North and Northside cleaning and maintenance of covers.
- Completed motor service on 15 electric pumps.
- Isolated Morro Tank to test feeding Morro Zone from Pala Mesa Tank.
- Assisted/performed 11 water quality complaints.
- Collected Cycle 3 routine samples.

Water Quality:

- 22 Routine coliform samples
- 16 Nitrification samples
- 11 Water quality complaint (odor complaints, dead end line flushed)
- 11 Special samples
- 373 Backflows tested

WASTEWATER:

Monthly, Semi Annual and Annual Reports:

California Integrated Water Quality System (CIWQS): Confirmation #2492004 - Reported "No Spill Report" for Month of July 2017.

July 5, 2017 Lift #4 (Rancho Monserate) – Bypass Job #112467 (6" force main tie-in).

June 19, 2017 – Electrician & Wastewater crewmembers megged all motors at Lift Stations (#s 1 - 6).

July 26, 2017 – After-hours inquiry service call - Responded to customer's 3" sewer line root problem at driveway; advised homeowner to call plumber.

Lift Station Pumps / Preventative Maintenance:

Date	Location	Cause
July 4, 2017	Lift Station #1	High level alarm, Plugged pump # 3
July 9, 2017	Lift Station #3	Troubleshoot / Need psi transducer (repaired)
July 14, 2017	Lift Station #1	High level alarm - Plugged pump #1
July 29, 2017	Stallion	Loss of SCADA/Low Flow – Rebooted SCADA

Lift Stations Generators:

July 25, 2017: Lift Station #1 Alternator failure (replaced/repaired).

Sewer Line Cleaning:

June 29, 2017 – July 5,2017: 3,235' sewer line cleaned @ Sycamore Ranch & Golf Course

July 6, 2017 – July 12, 2017: 6,391' sewer line cleaned @ Flowerwood Lane

July 13, 2017 – July 19, 2017: 3,095' sewer line cleaned @ Tecalote/White Fox Run

Total sewer lines cleaned: ***12,751'***

High Frequency Cleaning:

July 21, 2017: Cleaned 1,410 siphon lines (8" & 10" sewer lines)

July 18, 2017: H-6 #2, H-6 #3 – Cleaned 181' root-ball at Pala Mesa Golf Course / High pressure cleaned to remove roots

Total sewer lines cleaned: ***1,591'***

Manhole Inspections:

June 29, 2017 – July 5, 2017: 16 manholes inspected

July 6, 2017 – July 12, 2017: 35 manholes inspected

July 13, 2017 – July 19, 2017: 14 manholes inspected

Total manholes inspected for month of April 2017: ***65***

CCTV (Contracted)

July 13, 2017 – July 18, 2017: 3,211' sewer lines televised (Pala Mesa)

July 20, 2017 – July 26, 2017: 597' sewer lines televised (Pala Mesa)

Total lines CCTV inspected: **3,770**

Smart/Cover Alarm Units: N/A

EMPLOYEE RECOGNITION – OPERATIONS DIVISION:

District's Monthly "Excellence Program" Coin Award Winners

Teamwork:

- Steve Coffey
- Rene Del Rio
- Justin Demary
- Bryan Rose
- Marc Walker
- John Maccarrone

Professionalism:

- Ed Bradley

Other Certifications Obtained:

- Ricardo Zaragoza achieved his Water Distribution Grade III State Certification.

Darren S. Milner 8/22/17
Operations Manager

RAINBOW MUNICIPAL WATER DISTRICT
Committed to Excellence

BOARD INFORMATION

BOARD OF DIRECTORS

August 22, 2017

SUBJECT

Engineering Report for July 2017

DESCRIPTION

CAPITAL PROJECTS:

Bonsall Basin Imported Return Flow: Request for proposal released. Proposals due end of August.

Condition Assessment of Water Facilities: The Consultant is working on the technical memorandum.

Gird to Monserate Hill: Bid documents pending new alignment. Staff working on alignment with minimal environmental impacts.

Horse Creek Lift Station: Developer started construction. The Lift Station is scheduled to be completed by early next year.

Highway 76 East Segment: Contractor is coating manholes and rectifying the punch list.

Knottwood Way Waterline Improvements: Notice to proceed will be issued on August 8, 2017.

Lift Station 1 Replacement: The property has been fenced in and the lift station design is underway.

Moosa Crest Waterline (Emergency) Project: Notice to proceed pending easement approval.

Pump Station #1 Upgrades: Staff reviewing 60% design submittal.

Water / Wastewater Asset Cost & Capacity Fee Study: Board approved new capacity fees effective August 1, 2017.

Wastewater Outfall Replacement: Project on hold until further evaluation from local water alternatives. Project may take the form of rehabilitation with equalization basin.

Weese Filtration Plant Interconnect: Consultant is working on the predesign report.

OTHER PROJECTS:

Moosa Creek Mitigation Bank: Staff working with Consultant on easements.

DEVELOPER PROJECTS:

Golf Green Estates – Rio Estrella: (near Lift Station 1): 94 SFR planned across from Bonsall Elementary School. Contractor installing 8" onsite sewerline and 8" onsite waterline. Sewer testing was completed for phase one. Potable water main testing completed for phase one and two.

Horse Ranch Creek Ridge (D.R. Horton - formally Campus Park, Passerelle): 850 WMs / 850 EDUs – Off of Highway 76 and Horse Ranch Creek Road. Staff is reviewing submittals. The Contractor has begun grading and construction of the lift station on Pankey Road, in addition to installing the gravity sewer within Horse Ranch Creek Road. Testing for potable water main is scheduled for the week of July 10, 2017 on highway 76 and within the village. Purchased 18 irrigation meters on June 14, 2017.

Malabar Ranch: 31 WMs / 29 EDUs - There are 17 out of 31 homes built. Contractor shall complete waterline relocation and punch list items.

Nessy Burger: Nessy Burger's is proposing to install a permanent building. Plan check two completed.

Pala Mesa Highlands: 124 Lots on Old Highway 395. Staff completed review of submittals. Contractor installing sewer and water mains. The tie-in shutdown for the new waterline is scheduled for mid-August 2017.

Palomar College: Plan check two for sewer extension is complete.

OTHER:

ITEMS	NO#	ITEMS	NO#
Water Availability Letters	1	Water Meters Purchased	50
Sewer Availability Letters	0	Sewer EDUs Purchased	0
Water Commitment Letters	0	Developer Shutdowns	0
Sewer Commitment Letters	0	Jobs Closed: SLRGW	1

Sherry Kirkpatrick 8/22/17
Engineering Manager

RAINBOW MUNICIPAL WATER DISTRICT
Committed to Excellence

BOARD INFORMATION

BOARD OF DIRECTORS

August 8, 2017

SUBJECT

July: Customer Service & Meter Services

DESCRIPTION

METER SERVICES:

Meter Services completed 934 service orders. Here is a summary of the most pertinent service orders shown by category.

SERVICE ORDERS	COMPLETED
Check Reads	550
Transfers	77
Locked	19
Unlocked	20
Pressure Calls	27
Leaks	82
Drought	0

CUSTOMER SERVICE & METER SERVICES:

Nothing to report

Vanessa Martinez 8/8/2017
Finance Manager

Kenny Diaz 8/8/2017
Meter Services Crew Leader

RAINBOW MUNICIPAL WATER DISTRICT
Committed to Excellence

BOARD INFORMATION

BOARD OF DIRECTORS

August 22, 2017

SUBJECT

HUMAN RESOURCES REPORT FOR JULY/AUGUST 2017

DESCRIPTION

Personnel changes, human resources activities, and safety report for July/August 2017

PERSONNEL CHANGES:

- Jessica White, J.D. started as the temporary Human Resources Analyst on July 25, 2017.
- There are currently two temporary Customer Service Representatives filling in until the full-time vacancy is filled.
- One Utility Worker III in the Meters Department returned from a leave of absence on August 7th.
- The Purchasing / Warehouse Technician is continuing a leave of absence that has been extended until September. An employee from Valve Maintenance has temporarily transferred into the position until the regular employee returns.

RECRUITMENT:

Customer Service Representative I
This position was posted between July 15 and July 31. We advertised on Governmnentjobs.com and Snagajob.com for a cost of $272. The Human Resources Manager also set up a company page on Indeed.com (the world's largest job search engine), and got our Job Postings page indexed by Indeed.com for free. We also took advantage of a free trial with ZipRecruiter.

We received 408 total applications for this position, which is a 400% increase since the last time this position was posted in April of 2016, even with the new salary range starting rate that is close to $3 per hour lower. Of the 408 applications, 131 were identified as qualified candidates, and 26 of the most highly qualified were invited to take assessments to help us identify how their individual strengths might match the job's needs. Interviews with the 8 top candidates will be scheduled for August 15, 2015.

BENEFITS:

Health Insurance Renewal Rates for 2018
ACWA-JPIA sent out the renewal packets for 2018 plans. The Human Resources Manager is investigating the District's eligibility for incentive rates, and the fiscal benefits of the policy changes required to qualify. If approved, the Incentive rates would reflect a 4% rate discount.

With the current rate structure, rates would increase by the following amounts for the plans we currently offer:

Anthem PPO – 4.5%
Anthem HMO – 8.26%
Anthem CDHP – 4.5%
Traditional Kaiser HMO – 13.05%
Kaiser CDHP – 13.04%

EMPLOYEE RECOGNITION:

Excellence Coin Awards
The following coins were issued in July:

Teamwork	**REA and RASCE Negotiation Team Members –** For their dedication to serving their members throughout the negotiation process. They were diligent in their roles and considered all members' needs and interests throughout the process. Team members awarded this coin include: Steve Coffey, Rene Del Rio, Justin Demary, Dawn Washburn, Cynthia Gray, and Bryan Rose.
	Marc Walker and John Maccarrone – For continuously being flexible in making their employees available during the three months of labor negotiations. They made numerous last minute schedule changes to enable their team members to participate in the process.
Professionalism	**Ed Bradley** – For his calm, stabilizing demeanor and professional communication throughout the negotiations process. He set the tone and led the team by example to maintain positive relationships.

TRAINING AND DEVELOPMENT:

Certified Occupational Safety Manager
The Human Resources Manager attended a week-long "boot camp" style training to obtain the Certified Occupational Safety Manager designation. This training included an overview of safety management issues, strategic planning for injury management, leading and lagging key performance indicators, managing risk, safety budgets and finance, incentives and discipline, and strategic communication of the safety message. The class also included many resources and tools the District can use for our safety programs.

NEOGOV:

Insight Module
Since implementation in December, the District has accumulated over 1,630 subscriptions for email notifications for job opportunities. The current opening for a Customer Service Representative I position was the first job posted on the new NEOGOV Insight Applicant Tracking System (ATS), which allowed us to accept online applications for the first time.

Between the Insight implementation and the job marketing strategy, we received 3,026 page views of our job posting and 408 total applications. Our conversion rate (number of applications per page views) of 13.5% was significantly higher than the 8.59% average reported in Jobvite's 2017 Recruiting Funnel Benchmarking Report. The screening tools in Insight allowed the Human Resources Manager and Finance Manager to efficiently identify the most highly qualified candidates to continue in the selection process.

Onboard Module
The implementation process for the second module, Onboard, is nearly complete. The Human Resources Analyst is creating the new hire checklist and completing form entry. It should be ready for the new Customer Service Representative before their start date.

Perform Module
The Perform Module is how we will shift our performance evaluation process to an online process that promises to be more efficient, useful, and meaningful to employees. Kickoff for implementation of this module is expected to begin immediately following completion of Onboard.

SAFETY:

Incidents
As of the day of the Board meeting, it will be 931 days since our last lost time injury.
It has been 28 days since the last worker's compensation claim.

Safety Training

Target Solutions online training: 19 completions for July 2017.

Tailgate Trainings

- Machine Guarding: 27 Employees
  Focused on the angle grinder as a multi-function tool that can prep metal surfaces before welding, transform ugly welds into smooth paintable surfaces and can also cut metal stock. The angle grinder can also remove rust and deburr pipe. Angle grinders are one of the most dangerous electric hand tools because they spin at a very high speed often more than 10,000 rpm.

- AC Pipe Refresher: 12 Employees
  OSHA requires an annual 2-hour refresher for Asbestos Containing Pipe for those who have a potential exposure. Although RMWD does not have an everyday exposure during a pipe repair, asbestos pipe was used at Rainbow MWD before regulation prevented its use and therefore is unearthed from time to time. Training is taught by an outside instructor whose curriculum is certified by the State of California.

Karleen Harp, COSM 08/22/2017
Human Resources Manager

General Ledger
Interim Financials
Period: JUNE-17

RAINBOW MUNICIPAL WATER DISTRICT
Committed to Excellence

Account Number		Description	Budget Amount	Period Amount	YTD Amount	YTD Variance	Encumbered Amount	Amount Available	% Available
Fund	**01**	**WATER FUND**							
Department	**01-00**								
		Water Revenue							
01-00-41110		Water Sales-SF, MF, CM, IS	6,075,496	642,395	6,229,464	-153,968	0	-153,968	0%
01-00-41115		Water Sales-Domestic-Unbilled	0	0	-323,013	323,013	0	323,013	0%
01-00-41120		Water Sales-Agriculture Dom	1,049,500	94,013	1,017,317	32,183	0	32,183	3%
01-00-41125		Water Sales-Ad Noncert Unbilld	0	0	-73,857	73,857	0	73,857	0%
01-00-41130		Water Sales-Ag/Dom Met Cert	1,157,290	0	0	1,157,290	0	1,157,290	100%
01-00-41160		Water Sales- Agriculture	4,207,195	369,153	4,374,123	-166,928	0	-166,928	0%
01-00-41165		Water Sales-Ag.Nondis Unbilled	0	0	-319,069	319,069	0	319,069	0%
01-00-41170		Water Sales-Construction	216,282	12,237	190,638	25,644	0	25,644	12%
01-00-41175		Water Sales-Construction-Unbil	0	0	-4,144	4,144	0	4,144	0%
01-00-41180		Water Sales - TSAWR Com	4,106,205	460,612	3,925,671	180,534	0	180,534	4%
01-00-41185		Water Sales-Sawr Ag Unbilled	0	0	-246,113	246,113	0	246,113	0%
01-00-41190		Water Sales- TSAWR Dom	6,081,872	619,702	5,786,585	295,287	0	295,287	5%
01-00-41195		Water Sales Sawr Ag/D Unbilled	0	0	-385,450	385,450	0	385,450	0%
01-00-42120		Monthly O&M Charges - Rainbow	5,542,712	458,451	5,462,823	79,889	0	79,889	1%
01-00-42121		Monthly O&M Charges - CWA	5,389,049	463,579	5,455,881	-66,832	0	-66,832	0%
01-00-42130		Readiness-To-Serve Rev Id#1	300,000	0	270,710	29,290	0	29,290	10%
01-00-42140		Pumping Charges	537,363	43,918	537,165	198	0	198	0%
01-00-43101		Operating Inc Turn On/Off Fees	5,000	1,025	3,175	1,825	0	1,825	37%
01-00-43104		Operating Inc. R.P. Charges	231,936	22,890	249,444	-17,508	0	-17,508	0%
01-00-43106		Operating Inc Water Letter Fee	500	0	0	500	0	500	100%
01-00-43109		Operating Inc Inspections	20,000	-24,785	272,742	-252,742	0	-252,742	0%
01-00-43110		Operating Inc Plans And Specs	1,000	0	300	700	0	700	70%
01-00-43111		Operating Inc Install Fees,Hyd	3,500	1,265	3,795	-295	0	-295	0%
01-00-43114		Operating Inc-Miscellaneous	5,000	588	-15,201	20,201	0	20,201	404%
01-00-43116		New Meter Sales/Install Parts	8,500	7,620	11,955	-3,455	0	-3,455	0%
01-00-43117		Notice Delivery Revenue	35,000	1,600	13,640	21,360	0	21,360	61%
		Water Revenue Sub Totals:	**34,973,400**	**3,174,263**	**32,438,581**	**2,534,819**	**0**	**2,534,819**	**7%**
		Interest Income							
01-00-49201		Interest Revenues-Water Fund	0	0	0	0	0	0	0%
		Interest Income Sub Totals:	**0**	**0**	**0**	**0**	**0**	**0**	**0%**

General Ledger
Interim Financials
Period: JUNE-17

RAINBOW MUNICIPAL WATER DISTRICT
Committed to Excellence

Account Number	Description	Budget Amount	Period Amount	YTD Amount	YTD Variance	Encumbered Amount	Amount Available	% Available
	Other Revenue							
01-00-49102	Non Oper Inc-Nsf Check Fees	1,500	60	1,320	180	0	180	12%
01-00-49109	Non Oper Inc-Miscellaneous	50,000	2,280	55,095	-5,095	0	-5,095	0%
01-00-49301	Property Tax Rev. - Ad Valorem	315,000	0	353,442	-38,442	0	-38,442	0%
01-00-49401	Gains/Losses	0	0	0	0	0	0	0%
	Other Revenue Sub Totals:	**366,500**	**2,340**	**409,857**	**-43,357**	**0**	**-43,357**	**0%**
	Revenue Sub Totals:	**35,339,900**	**3,176,603**	**32,848,439**	**2,491,461**	**0**	**2,491,461**	**7%**
	Cost Of Water Sold							
01-00-50001	Water Purchases	19,938,700	2,537,598	19,908,870	29,831	0	29,831	0%
01-00-50003	Water In Storage	0	-277,833	-320,542	320,542	0	320,542	0%
01-00-50005	Ready To Serve Charge	518,268	42,413	508,954	9,314	0	9,314	2%
01-00-50006	Infrastructure Access Charge	468,102	41,629	468,102	0	0	0	0%
01-00-50008	Ag Credit-Sawr	-1,592,850	-332,833	-1,377,994	-214,856	0	-214,856	0%
01-00-50009	Seasonal Storage Credit	702,348	0	0	702,348	0	702,348	100%
01-00-50010	Customer Service Charge	1,177,944	95,873	1,177,947	-3	0	-3	0%
01-00-50011	Capacity Reservation Charge	563,046	39,028	563,043	3	0	3	0%
01-00-50012	Emergency Storage Charge	1,652,034	132,476	1,652,039	-5	0	-5	0%
01-00-50013	Supply Reliability Charge	0	55,348	701,976	-701,976	0	-701,976	0%
01-00-52176	Overhead Transfer To Gen Fund	0	0	3,505,952	-3,505,952	0	-3,505,952	0%
	Cost of Water Sold Sub Totals:	**23,427,592**	**2,333,699**	**26,788,345**	**-3,360,753**	**0**	**-3,360,753**	**0%**
	Payroll & Employee Expenses							
01-00-56101	Regular Salaries	0	0	625	-625	0	-625	0%
01-00-56501	Employer'S Share Fica Ssi	0	0	36	-36	0	-36	0%
01-00-56502	Employer'S Share Fica Medicare	0	0	9	-9	0	-9	0%
01-00-56503	Medical Ins Acwa Health Ben	0	0	1,646	-1,646	0	-1,646	0%
01-00-56504	Dental Insurance	0	0	0	0	0	0	0%
01-00-56505	Vision Ins Acwa Serv Corp	0	0	0	0	0	0	0%
01-00-56506	Life, S/T, L/T Disability Ins	0	8,734	52,255	-52,255	0	-52,255	0%
01-00-56507	Retirement - Calpers	0	0	43	-43	0	-43	0%
01-00-57100	Depreciation Expenses-Curr Yr	0	0	0	0	0	0	0%
	Payroll & Employee Expense Sub Totals:	**0**	**8,734**	**54,614**	**-54,614**	**0**	**-54,614**	**0%**

General Ledger
Interim Financials
Period: JUNE-17

RAINBOW MUNICIPAL WATER DISTRICT
Committed to Excellence

Account Number		Description	Budget Amount	Period Amount	YTD Amount	YTD Variance	Encumbered Amount	Amount Available	% Available
		Expense Sub Totals:	**23,427,592**	**2,342,433**	**26,842,959**	**-3,415,367**	**0**	**-3,415,367**	**0%**
		Department 00 Sub Totals:	**-11,912,308**	**-834,170**	**-6,005,479**	**-5,906,829**	**0**		
Department	**01-31**	**PUMPING**							
		Payroll & Employee Expenses							
01-31-56101		Regular Salaries	89,429	3,698	41,477	47,952	0	47,952	54%
01-31-56103		Overtime Paid, Comptime Earn.	500	0	66	434	0	434	87%
01-31-56501		Employer'S Share Fica Ssi	5,545	207	2,372	3,173	0	3,173	57%
01-31-56502		Employer'S Share Fica Medicare	1,297	53	597	700	0	700	54%
01-31-56503		Medical Ins Acwa Health Ben	17,465	852	7,242	10,223	0	10,223	59%
01-31-56504		Dental Insurance	1,687	79	430	1,257	0	1,257	75%
01-31-56505		Vision Ins Acwa	228	10	119	109	0	109	48%
01-31-56506		Life, S/T,L/T Disability Ins	1,357	0	0	1,357	0	1,357	100%
01-31-56507		Retirement-Calpers	14,935	372	4,072	10,863	0	10,863	73%
01-31-56512		Employee Training/Tuition Reim	0	0	0	0	0	0	0%
01-31-56515		Worker'S Compensation Ins	3,393	0	2,290	1,103	0	1,103	33%
01-31-56516		State Unemployment Ins, E.T.T.	252	0	36	216	0	216	86%
01-31-56520		Deferred Comp-Employer Contrib	2,600	85	791	1,809	0	1,809	70%
		Payroll & Employee Expense Sub Totals:	**138,688**	**5,356**	**59,492**	**79,196**	**0**	**79,196**	**57%**
		Pumping Expenses							
01-31-63100		Equipment Maintenance/Repair	61,000	5,429	43,266	17,734	6,335	11,400	19%
01-31-63401		Building Maintenance	1,500	0	0	1,500	0	1,500	100%
01-31-72000		Supplies & Services	20,000	4,200	5,421	14,579	4,014	10,565	53%
01-31-72150		Regulatory Permits	5,000	0	0	5,000	0	5,000	100%
01-31-73000		Small Tools And Equipment	1,000	0	0	1,000	0	1,000	100%
01-31-78000		Utilities - Electricity	552,300	43,541	423,077	129,223	0	129,223	23%
		Pumping Expenses Sub Totals:	**640,800**	**53,170**	**471,764**	**169,036**	**10,349**	**158,688**	**25%**
		Expense Sub Totals:	**779,488**	**58,526**	**531,256**	**248,232**	**10,349**	**237,884**	**31%**
		Department 31 Sub Totals:	**779,488**	**58,526**	**531,256**	**248,232**	**10,349**		

General Ledger
Interim Financials
Period: JUNE-17

RAINBOW MUNICIPAL WATER DISTRICT
Committed to Excellence

Account Number		Description	Budget Amount	Period Amount	YTD Amount	YTD Variance	Encumbered Amount	Amount Available	% Available
Department	**01-32**	**OPERATIONS**							
		Payroll & Employee Expenses							
01-32-56101		Regular Salaries	631,710	47,533	759,848	-128,138	0	-128,138	0%
01-32-56103		Overtime Paid, Comptime Earn.	50,000	4,076	49,364	636	0	636	1%
01-32-56501		Employer'S Share Fica Ssi	39,166	3,024	46,813	-7,647	0	-7,647	0%
01-32-56502		Employer'S Share Fica Medicare	9,160	760	11,836	-2,676	0	-2,676	0%
01-32-56503		Medical Ins Acwa Health Ben	121,278	9,902	132,799	-11,521	0	-11,521	0%
01-32-56504		Dental Insurance	10,964	954	10,367	597	0	597	5%
01-32-56505		Vision Ins Acwa	1,484	123	1,481	3	0	3	0%
01-32-56506		Life, S/T,L/T Disability Ins	9,181	0	0	9,181	0	9,181	100%
01-32-56507		Retirement-Calpers	105,496	4,689	66,064	39,432	0	39,432	37%
01-32-56512		Employee Training/Tuition Reim	13,000	5,141	15,533	-2,533	0	-2,533	0%
01-32-56515		Worker'S Compensation Ins	23,967	0	16,178	7,789	0	7,789	33%
01-32-56516		State Unemployment Ins, E.T.T.	1,638	0	1,906	-268	0	-268	0%
01-32-56518		Duty Pay	13,000	1,000	13,000	0	0	0	0%
01-32-56520		Deferred Comp-Employer Contrib	16,900	1,175	16,262	638	0	638	4%
		Payroll & Employee Expense Sub Totals:	**1,046,944**	**78,377**	**1,141,449**	**-94,505**	**0**	**-94,505**	**0%**
		Water Operation Expenses							
01-32-60000		Electronics	44,500	924	42,652	1,848	7,121	-5,272	0%
01-32-63100		Equipment Maintenance/Repairs	13,500	91	1,097	12,403	1,800	10,603	79%
01-32-63102		Equipment Maintenance Contract	23,000	659	4,532	18,468	-350	18,818	82%
01-32-63401		Building Maintenance	1,000	0	0	1,000	0	1,000	100%
01-32-72000		Supplies And Services	244,189	7,426	151,847	92,342	-84,365	176,707	72%
01-32-72010		Tank Maintenance	664,643	0	562,914	101,729	0	101,729	15%
01-32-72150		Regulatory Permits	41,000	0	49,200	-8,200	0	-8,200	0%
01-32-72400		Dues & Subscriptions	12,811	0	12,811	0	0	0	0%
01-32-72700		Printing & Reproductions	5,000	0	0	5,000	0	5,000	100%
01-32-73000		Small Tools And Equipment	1,000	0	796	204	1,590	-1,386	0%
01-32-75300		Travel/Conf/Training	2,000	618	1,960	40	0	40	2%
01-32-78000		Utilities	12,600	1,021	11,906	694	0	694	6%
01-32-82000		Capital Equipment	21,120	0	5,795	15,325	0	15,325	73%
		Water Operation Expenses Sub Totals:	**1,086,363**	**10,739**	**845,510**	**240,853**	**-74,204**	**315,057**	**29%**

General Ledger
Interim Financials
Period: JUNE-17

RAINBOW MUNICIPAL WATER DISTRICT
Committed to Excellence

Account Number		Description	Budget Amount	Period Amount	YTD Amount	YTD Variance	Encumbered Amount	Amount Available	% Available
		Expense Sub Totals:	**2,133,307**	**89,116**	**1,986,960**	**146,347**	**-74,204**	**220,551**	**10%**
		Department 32 Sub Totals:	**2,133,307**	**89,116**	**1,986,960**	**146,347**	**-74,204**		
Department	**01-33**	**VALVE MAINTENANCE**							
		Payroll & Employee Expenses							
01-33-56101		Regular Salaries	309,284	14,273	259,986	49,298	0	49,298	16%
01-33-56103		Overtime Paid, Comptime Earn.	4,500	33	12,539	-8,039	0	-8,039	0%
01-33-56501		Employer'S Share Fica Ssi	19,176	794	15,381	3,795	0	3,795	20%
01-33-56502		Employer'S Share Fica Medicare	4,485	201	3,902	583	0	583	13%
01-33-56503		Medical Ins Acwa Health Ben	72,669	3,619	57,901	14,768	0	14,768	20%
01-33-56504		Dental Insurance	6,747	334	4,340	2,407	0	2,407	36%
01-33-56505		Vision Ins Acwa	913	43	701	212	0	212	23%
01-33-56506		Life, S/T,L/T Disability Ins	4,675	0	0	4,675	0	4,675	100%
01-33-56507		Retirement-Calpers	51,650	1,354	24,703	26,947	0	26,947	52%
01-33-56512		Employee Training/Tuition Reim	2,000	161	690	1,310	0	1,310	66%
01-33-56515		Worker'S Compensation Ins	11,734	0	7,921	3,814	0	3,814	32%
01-33-56516		State Unemployment Ins, E.T.T.	1,008	0	646	362	0	362	36%
01-33-56520		Deferred Comp-Employer Contrib	10,400	379	6,936	3,464	0	3,464	33%
		Payroll & Employee Expense Sub Totals:	**499,241**	**21,191**	**395,645**	**103,596**	**0**	**103,596**	**21%**
		Valve Maintenance Expenses							
01-33-72000		Supplies And Services	66,500	2,093	74,050	-7,550	2,891	-10,440	0%
01-33-73000		Small Tools And Equipment	1,000	0	0	1,000	0	1,000	100%
01-33-75300		Travel/Conferences/Training	1,000	0	0	1,000	0	1,000	100%
01-33-82000		Shop And Field Equipment	50,000	0	40,901	9,099	1,000	8,099	16%
		Valve Maintenance Expenses Sub Totals:	**118,500**	**2,093**	**114,951**	**3,549**	**3,891**	**-342**	**0%**
		Expense Sub Totals:	**617,741**	**23,284**	**510,596**	**107,145**	**3,891**	**103,254**	**17%**
		Department 33 Sub Totals:	**617,741**	**23,284**	**510,596**	**107,145**	**3,891**		

General Ledger
Interim Financials
Period: JUNE-17

RAINBOW MUNICIPAL WATER DISTRICT
Committed to Excellence

Account Number		Description	Budget Amount	Period Amount	YTD Amount	YTD Variance	Encumbered Amount	Amount Available	% Available
Department	**01-34**	**WATER DISTRICT**							
		Payroll & Employee Expenses							
01-34-56101		Regular Salaries	843,611	61,412	701,032	142,579	0	142,579	17%
01-34-56103		Overtime Paid, Comptime Earn.	140,000	11,543	136,383	3,617	0	3,617	3%
01-34-56501		Employer'S Share Fica Ssi	56,024	4,176	48,410	7,614	0	7,614	14%
01-34-56502		Employer'S Share Fica Medicare	13,102	1,047	12,154	948	0	948	7%
01-34-56503		Medical Ins Acwa Health Ben	165,590	15,020	158,118	7,472	0	7,472	5%
01-34-56504		Dental Insurance	16,584	1,403	12,405	4,179	0	4,179	25%
01-34-56505		Vision Ins Acwa	2,397	189	2,040	357	0	357	15%
01-34-56506		Life, S/T,L/T Disability Ins	13,286	0	0	13,286	0	13,286	100%
01-34-56507		Retirement-Calpers	150,903	5,332	58,493	92,410	0	92,410	61%
01-34-56512		Employee Training/Tuition Reim	7,000	301	4,713	2,287	0	2,287	33%
01-34-56515		Worker'S Compensation Ins	35,220	0	23,150	12,070	0	12,070	34%
01-34-56516		State Unemployment Ins, E.T.T.	2,646	0	2,298	348	0	348	13%
01-34-56518		Duty Pay	13,000	1,000	13,036	-36	0	-36	0%
01-34-56520		Deferred Comp-Employer Contrib	24,700	1,848	21,852	2,848	0	2,848	12%
		Payroll & Employee Expense Sub Totals:	**1,484,063**	**103,270**	**1,194,084**	**289,979**	**0**	**289,979**	**20%**
		Water Distribution Expenses							
01-34-63100		Equipment Rental	0	0	80	-80	0	-80	0%
01-34-72000		Supplies And Services	353,000	48,850	537,366	-184,366	26,655	-211,022	0%
01-34-73000		Small Tools And Equipment	2,000	0	1,591	409	709	-300	0%
01-34-75300		Travel/Conferences/Meetings	3,000	395	1,627	1,373	0	1,373	46%
01-34-82000		Shop And Field Equipment	139,600	0	102,837	36,763	0	36,763	26%
		Water Distribution Expenses Sub Totals:	**497,600**	**49,245**	**643,502**	**-145,902**	**27,364**	**-173,266**	**0%**
		Expense Sub Totals:	**1,981,663**	**152,515**	**1,837,586**	**144,077**	**27,364**	**116,713**	**6%**
		Department 34 Sub Totals:	**1,981,663**	**152,515**	**1,837,586**	**144,077**	**27,364**		

General Ledger
Interim Financials
Period: JUNE-17

RAINBOW MUNICIPAL WATER DISTRICT
Committed to Excellence

Account Number		Description	Budget Amount	Period Amount	YTD Amount	YTD Variance	Encumbered Amount	Amount Available	% Available
Department	**01-35**	**METER SERVICES**							
		Payroll & Employee Expenses							
01-35-56101		Regular Salaries	429,602	24,821	397,859	31,743	0	31,743	7%
01-35-56103		Overtime Paid, Comptime Earn.	3,000	2,285	38,889	-35,889	0	-35,889	0%
01-35-56501		Employer'S Share Fica Ssi	26,635	1,545	25,268	1,367	0	1,367	5%
01-35-56502		Employer'S Share Fica Medicare	6,229	388	6,353	-124	0	-124	0%
01-35-56503		Medical Ins Acwa Health Ben	72,699	6,221	72,371	328	0	328	0%
01-35-56504		Dental Insurance	9,277	685	7,051	2,226	0	2,226	24%
01-35-56505		Vision Ins Acwa Serv Corp	1,027	89	1,056	-29	0	-29	0%
01-35-56506		Life, S/T, L/T Disability Ins	6,496	0	0	6,496	0	6,496	100%
01-35-56507		Retirement - Calpers	71,743	2,478	37,957	33,786	0	33,786	47%
01-35-56512		Employee Training/Tuition Reim	2,000	121	1,028	972	0	972	49%
01-35-56515		Worker'S Compensation Ins	18,751	0	12,672	6,079	0	6,079	32%
01-35-56516		State Unemployment Ins, E.T.T.	1,386	0	1,428	-42	0	-42	0%
01-35-56520		Deferred Comp-Employer Contrib	14,300	872	11,768	2,532	0	2,532	18%
01-35-56524		Other Post Employment Benefits	3,788	0	0	3,788	0	3,788	100%
		Payroll & Employee Expense Sub Totals:	**666,933**	**39,504**	**613,700**	**53,233**	**0**	**53,233**	**8%**
		Meter Services Expenses							0%
01-35-63404		Backflow Expenses	230,050	103,609	343,692	-113,642	0	-113,642	0%
01-35-72000		Supplies & Services	95,000	17,740	193,333	-98,333	2,500	-100,833	0%
01-35-73000		Small Tools And Equipment	2,000	0	1,551	449	1,324	-875	0%
01-35-75300		Replacement Reserve-Oceanside	500	0	0	500	0	500	100%
01-35-82000		Shop And Field Equipment	135,000	89	124,660	10,340	169	10,171	8%
		Meter Services Expenses Sub Totals:	**462,550**	**121,438**	**663,235**	**-200,685**	**3,993**	**-204,678**	**0%**
		Expense Sub Totals:	**1,129,483**	**160,942**	**1,276,934**	**-147,451**	**3,993**	**-151,444**	**0%**
		Department 35 Sub Totals:	**1,129,483**	**160,942**	**1,276,934**	**-147,451**	**3,993**		
Department	**01-41**	**ADMINISTRATION**							
		Administration Expenses							
01-41-72000		Supplies And Services	0	0	14	-14	0	-14	0%
		Administration Expenses Sub Totals:	**0**	**0**	**14**	**-14**	**0**	**-14**	**0%**
		Expense Sub Totals:	**0**	**0**	**14**	**-14**	**0**	**-14**	**0%**

General Ledger
Interim Financials
Period: JUNE-17

RAINBOW MUNICIPAL WATER DISTRICT
Committed to Excellence

Account Number		Description	Budget Amount	Period Amount	YTD Amount	YTD Variance	Encumbered Amount	Amount Available	% Available
		Dept 41 Sub Totals:	**0**	**0**	**14**	**-14**	**0**		
		Fund Revenue Sub Totals:	**35,339,900**	**3,176,603**	**32,848,439**	**2,491,461**	**0**	**2,491,461**	**7%**
		Fund Expense Sub Totals:	**30,069,274**	**2,826,815**	**32,986,305**	**-2,917,031**	**-28,607**	**-2,888,424**	**0%**
		Fund 01 Sub Totals:	**-5,270,626**	**-349,787**	**137,867**	**-5,408,493**	**-28,607**		
Fund	**02**	**SEWER FUND**							
Department	**02-00**								
		Wastewater Revenue							
02-00-41110		Sewer Charges-Established Acct	2,350,000	204,476	2,463,814	-113,814	0	-113,814	0%
02-00-41210		Sewer Charges-Developing Accts	150,000	8,389	106,275	43,725	0	43,725	29%
02-00-43101		Sewer-Oakcrest Service Charges	5,000	1,950	9,787	-4,787	0	-4,787	0%
02-00-43106		Operating Inc-Sewer Letter Fee	500	0	700	-200	0	-200	0%
02-00-43110		Operating Inc-Plan Chk/Ins Fee	0	0	26,134	-26,134	0	-26,134	0%
02-00-49109		Non-Operating Revenue	0	0	9,449	-9,449	0	-9,449	0%
		Wastewater Revenue Sub Totals:	2,505,500	214,815	2,616,158	-110,658	0	-110,658	0%
		Other Revenue							
02-00-49301		Property Tax Rev - Ad Valorem	40,000	0	49,837	-9,837	0	-9,837	0%
02-00-49401		Gains/Losses	0	0	0	0	0	0	0%
		Other Revenue Sub Totals:	**40,000**	**0**	**49,837**	**-9,837**	**0**	**-9,837**	**0%**
		Revenue Sub Totals:	**2,545,500**	**214,815**	**2,665,995**	**-120,495**	**0**	**-120,495**	**0%**
		Wastewater Expenses							
02-00-52176		Overhead Transfer to General Fund	640,450	0	822,384	-181,934	0	-181,934	0%
02-00-57100		Depreciation Expenses - Current Year	0	0	0	0	0	0	0%
		Wastewater Expenses Sub Totals:	**640,450**	**0**	**822,384**	**-181,934**	**0**	**-181,934**	**0%**
		Expense Sub Totals:	**640,450**	**0**	**822,384**	**-181,934**	**0**	**-181,934**	**0%**
		Department 00 Sub Totals:	**-1,905,050**	**-214,815**	**-1,843,611**	**-61,439**	**0**		

General Ledger
Interim Financials
Period: JUNE-17

RAINBOW MUNICIPAL WATER DISTRICT
Committed to Excellence

Account Number		Description	Budget Amount	Period Amount	YTD Amount	YTD Variance	Encumbered Amount	Amount Available	% Available
Department	**02-61**	**WASTEWATER**							
		Payroll & Employee Expenses							
02-61-56101		Regular Salaries	410,215	25,139	371,030	39,185	0	39,185	10%
02-61-56103		Overtime Paid, Comp Time Earn.	35,000	2,618	32,247	2,753	0	2,753	8%
02-61-56501		Employer'S Share Fica Ssi	25,433	1,597	23,252	2,181	0	2,181	9%
02-61-56502		Employer'S Share Fica Medicare	5,948	403	5,886	62	0	62	1%
02-61-56503		Medical Ins Acwa Health Ben	93,310	6,697	86,014	7,296	0	7,296	8%
02-61-56504		Dental Insurance	8,433	612	6,385	2,048	0	2,048	24%
02-61-56505		Vision Ins Acwa	1,141	79	977	164	0	164	14%
02-61-56506		Life, S/T,L/T Disability Ins	6,145	0	0	6,145	0	6,145	100%
02-61-56507		Retirement-Calpers	68,506	2,531	35,368	33,138	0	33,138	48%
02-61-56512		Employee Training/Tuition Reim	3,000	510	2,944	56	0	56	2%
02-61-56515		Worker'S Compensation Ins	19,117	0	12,904	6,213	0	6,213	33%
02-61-56516		State Unemployment Ins, E.T.T.	1,260	0	1,285	-25	0	-25	0%
02-61-56518		Duty Pay	13,000	1,000	11,500	1,500	0	1,500	12%
02-61-56520		Deferred Comp-Employer Contrib	13,000	705	9,975	3,025	0	3,025	23%
02-61-56524		Other Post Employment Benefits	3,481	0	0	3,481	0	3,481	100%
		Payroll & Employee Expense Sub Totals:	**706,989**	**41,891**	**599,768**	**107,221**	**0**	**107,221**	**15%**
		Wastewater Expenses							
02-61-60000		Equipment	18,300	0	16,057	2,243	2,363	-120	0%
02-61-63100		Equipment Maintenance-Sewer	22,000	8	17,840	4,160	3,835	324	1%
02-61-63401		Building Maintenance	6,000	0	659	5,341	1,907	3,435	57%
02-61-70000		Professional Services	0	1,950	16,087	-16,087	0	-16,087	0%
02-61-70300		Legal Services	10,000	0	0	10,000	0	10,000	100%
02-61-72000		Supplies And Services-Sewer	102,000	1,655	69,739	32,261	14,179	18,083	18%
02-61-72150		Regulatory Permits	5,000	0	4,163	837	0	837	17%
02-61-72200		Books And Resources	300	0	0	300	0	300	100%
02-61-72400		Dues And Subscriptions	800	0	538	262	0	262	33%
02-61-72600		Sewer Contracted Services	20,000	973	15,095	4,905	4,377	528	3%
02-61-73000		Small Tools And Equipment	3,000	0	978	2,022	43	1,980	66%
02-61-75300		Travel/Conferences/Training	2,000	0	1,813	187	0	187	9%
02-61-77000		Sewage Treat.-Oceanside Plant	900,000	67,974	865,376	34,624	0	34,624	4%
02-61-77100		Replacement Reserve-Oceanside	331,100	0	0	331,100	0	331,100	100%

General Ledger
Interim Financials
Period: JUNE-17

RAINBOW MUNICIPAL WATER DISTRICT
Committed to Excellence

Account Number		Description	Budget Amount	Period Amount	YTD Amount	YTD Variance	Encumbered Amount	Amount Available	% Available
02-61-78000		Utilities	58,000	5,206	55,363	2,637	0	2,637	5%
02-61-78300		Hazardous Waster Material Disp	12,000	420	8,170	3,830	0	3,830	32%
02-61-78700		Utilities-Propane	6,000	0	1,200	4,800	0	4,800	80%
02-61-82000		Shop And Field Equipment	20,000	0	10,526	9,474	0	9,474	47%
		Wastewater Expenses Sub Totals:	**1,516,500**	**78,185**	**1,083,604**	**432,896**	**26,704**	**406,192**	27%
		Expense Sub Totals:	**2,223,489**	**120,076**	**1,683,373**	**540,116**	**26,704**	**513,413**	**23%**
		Dept 61 Sub Totals:	**2,223,489**	**120,076**	**1,683,373**	**540,116**	**26,704**		
		Fund Revenue Sub Totals:	**2,545,500**	**214,815**	**2,665,995**	**-120,495**	**0**	**-120,495**	**0%**
		Fund Expense Sub Totals:	**2,863,939**	**120,076**	**2,505,757**	**358,182**	**26,704**	**331,479**	**12%**
		Fund 02 Sub Totals:	**318,439**	**-94,739**	**-160,239**	**478,678**	**26,704**		
Fund	**03**	**GENERAL FUND**							
Department	**03-00**								
		Other Revenue							
03-00-42200		Overhead Trs From Water, Sewer	4,730,000	0	4,328,336	401,664	0	401,664	8%
03-00-43102		Operating Inc Penalty/Int Chgs	225,000	17,235	188,409	36,591	0	36,591	16%
03-00-43108		Operating Inc Plan Check Rev.	12,000	0	1,395	10,605	0	10,605	88%
03-00-49108		Non Oper Inc-Rents And Leases	80,000	10,797	150,206	-70,206	0	-70,206	0%
03-00-49109		Miscellaneous Revenue	15,000	102	100,740	-85,740	0	-85,740	0%
03-00-49114		MISC Revenue - Eng. Services	0	0	2,000	-2,000	0	-2,000	0%
		Other Revenue Sub Totals:	**5,062,000**	**28,134**	**4,771,087**	**290,913**	**0**	**290,913**	**6%**
		Revenue Sub Totals:	**5,062,000**	**28,134**	**4,771,087**	**290,913**	**0**	**290,913**	**6%**
		Department 00 Sub Totals:	**-5,062,000**	**-28,134**	**-4,771,087**	**-290,913**	**0**		

General Ledger
Interim Financials
Period: JUNE-17

RAINBOW MUNICIPAL WATER DISTRICT
Committed to Excellence

Account Number		Description	Budget Amount	Period Amount	YTD Amount	YTD Variance	Encumbered Amount	Amount Available	% Available
Department	**03-20**	**BOARD OF DIRECTORS**							
		Payroll & Employee Expenses							
03-20-56202		Board Member Expenses	13,500	1,200	8,100	5,400	0	5,400	40%
03-20-56501		FICAR	837	74	493	344	0	344	41%
03-20-56502		MEDIR	196	17	127	69	0	69	35%
03-20-56515		Worker's Compensation Ins.	80	0	0	80	0	80	100%
		Payroll & Employee Expense Sub Totals:	**14,613**	**1,292**	**8,720**	**5,893**	**0**	**5,893**	**40%**
		Board of Directors Expenses							
03-20-72000		Supplies And Services	300	0	117	183	0	183	61%
03-20-75300		Travel/Conferences/Training	19,875	4,172	12,021	7,854	0	7,854	40%
		Board of Directors Expenses Sub Totals:	**20,175**	**4,172**	**12,138**	**8,037**	**0**	**8,037**	**40%**
		Expense Sub Totals:	**34,788**	**5,464**	**20,858**	**13,930**	**0**	**13,930**	**40%**
		Department 20 Sub Totals:	**34,788**	**5,464**	**20,858**	**13,930**	**0**		
Department	**03-36**	**GARAGE**							
		Payroll & Employee Expenses							
03-36-56101		Regular Salaries	87,250	5,305	80,080	7,170	0	7,170	8%
03-36-56103		Overtime Paid, Comp Time Earn.	1,000	73	2,000	-1,000	0	-1,000	0%
03-36-56501		Employer'S Share Fica Ssi	5,410	310	4,674	736	0	736	14%
03-36-56502		Employer'S Share Fica Medicare	1,265	79	1,179	86	0	86	7%
03-36-56503		Medical Ins Acwa Health Ben	18,402	1,121	15,775	2,627	0	2,627	14%
03-36-56504		Dental Insurance	1,687	123	1,295	392	0	392	23%
03-36-56505		Vision Ins Acwa	228	16	195	33	0	33	15%
03-36-56506		Life, S/T,L/T Disability Ins	1,323	0	0	1,323	0	1,323	100%
03-36-56507		Retirement-Calpers	14,571	534	7,427	7,144	0	7,144	49%
03-36-56515		Worker'S Compensation Ins	3,603	0	2,432	1,171	0	1,171	32%
03-36-56516		State Unemployment Ins, E.T.T.	252	0	217	35	0	35	14%
03-36-56520		Deferred Comp-Employer Contrib	2,600	44	601	1,999	0	1,999	77%
		Payroll & Employee Expense Sub Totals:	**137,591**	**7,603**	**115,876**	**21,715**	**0**	**21,715**	**16%**

General Ledger
Interim Financials
Period: JUNE-17

RAINBOW MUNICIPAL WATER DISTRICT
Committed to Excellence

Account Number	Description	Budget Amount	Period Amount	YTD Amount	YTD Variance	Encumbered Amount	Amount Available	% Available
	Garage Expenses							
03-36-63000	Equipment	2,500	0	2,010	490	9,471	-8,980	0%
03-36-63100	Equipment Maintenance	25,000	9,370	33,522	-8,522	28,853	-37,375	0%
03-36-63421	Fuel And Oil	95,000	9,270	88,982	6,018	16,298	-10,280	0%
03-36-63422	Repair, Supplies, Auto	65,000	3,743	71,564	-6,564	26,087	-32,651	0%
03-36-72000	Supplies And Services	5,500	775	6,667	-1,167	12,986	-14,153	0%
03-36-72150	Regulatory Permits	3,000	0	3,629	-629	0	-629	0%
03-36-73000	Small Tools And Equipment	6,500	136	5,052	1,448	2,000	-552	0%
03-36-75300	Travel/Conferences/Training	1,000	0	0	1,000	338	662	66%
03-36-83000	Vehicles	295,000	23,369	265,734	29,266	1,833	27,433	9%
	Garage Expenses Sub Totals	**498,500**	**46,663**	**477,159**	**21,341**	**97,866**	**-76,525**	**0%**
	Expense Sub Totals:	**636,091**	**54,266**	**593,035**	**43,056**	**97,866**	**-54,810**	**0%**
	Department 36 Sub Totals:	**636,091**	**54,266**	**593,035**	**43,056**	**97,866**		
Department 03-41	**ADMINISTRATION**							
	Payroll & Employee Expenses							
03-41-56101	Regular Salaries	547,985	55,303	589,536	-41,551	0	-41,551	0%
03-41-56103	Overtime Paid, Comp Time Earn.	6,100	3,594	17,596	-11,496	0	-11,496	0%
03-41-56501	Employer'S Share Fica Ssi	34,161	3,460	30,282	3,879	0	3,879	11%
03-41-56502	Employer'S Share Fica Medicare	7,989	866	8,839	-850	0	-850	0%
03-41-56503	Medical Ins Acwa Health Ben	60,027	4,950	49,517	10,510	0	10,510	18%
03-41-56504	Dental Insurance	5,621	727	5,850	-229	0	-229	0%
03-41-56505	Vision Ins Acwa	913	107	998	-85	0	-85	0%
03-41-56506	Life, S/T,L/T Disability Ins	6,556	0	599	5,957	0	5,957	91%
03-41-56507	Retirement-Calpers	92,015	5,174	57,512	34,503	0	34,503	37%
03-41-56511	Employee Uniform Allowance	16,000	2,315	14,113	1,887	0	1,887	12%
03-41-56512	Employee Training/Tuition Reim	3,950	0	2,716	1,234	0	1,234	31%
03-41-56515	Worker'S Compensation Ins	22,170	0	140,865	-118,695	0	-118,695	0%
03-41-56516	State Unemployment Ins, E.T.T.	1,008	0	1,052	-44	0	-44	0%
03-41-56520	Deferred Comp-Employer Contrib	10,400	921	9,394	1,006	0	1,006	10%
03-41-56524	Other Post Employment Benefits	6,413	0	0	6,413	0	6,413	100%
	Payroll & Employee Expense Sub Totals:	**821,308**	**77,417**	**928,870**	**-107,562**	**0**	**-107,562**	**0%**

General Ledger
Interim Financials
Period: JUNE-17

RAINBOW MUNICIPAL WATER DISTRICT
Committed to Excellence

Account Number	Description	Budget Amount	Period Amount	YTD Amount	YTD Variance	Encumbered Amount	Amount Available	% Available
	Administration & HR Expenses							
03-41-56513	Employee Relations	12,675	1,384	13,402	-727	0	-727	0%
03-41-60100	Computers	225,000	9,385	231,189	-6,189	16,808	-22,997	0%
03-41-63102	Equipment Maintenance Contract	2,500	0	0	2,500	0	2,500	100%
03-41-63200	Equipment Rental	37,000	3,374	37,365	-365	0	-365	0%
03-41-63400	Kitchen Supplies	3,000	1,655	4,104	-1,104	1,035	-2,139	0%
03-41-63401	Building Maintenance	91,400	7,162	116,780	-25,380	12,124	-37,503	0%
03-41-65000	Property/Liability Insurance	193,093	0	407,179	-214,086	0	-214,086	0%
03-41-65100	District Paid Insurance Claims	20,000	101,070	133,894	-113,894	0	-113,894	0%
03-41-70000	Professional Services	178,900	37,390	109,253	69,647	0	69,647	39%
03-41-70300	Legal Services	200,000	18,562	194,725	5,275	0	5,275	3%
03-41-72000	Supplies And Services	27,050	5,735	45,150	-18,100	1,110	-19,210	0%
03-41-72200	Books And Resources	250	0	0	250	0	250	100%
03-41-72400	Dues And Subscriptions	60,007	2,613	65,729	-5,722	0	-5,722	0%
03-41-72702	Public Notices/Advertising	1,000	150	663	337	0	337	34%
03-41-72900	Stationary & Office Supplies	25,000	179	14,594	10,406	102	10,303	41%
03-41-74000	Communicatons & Phone Bills	12,000	2,049	13,466	-1,466	0	-1,466	0%
03-41-74100	Phone Bill	27,476	4,508	52,207	-24,731	0	-24,731	0%
03-41-75300	Travel/Conferences/Training	25,720	4,433	41,435	-15,715	0	-15,715	0%
03-41-78000	Utilities-Electricity	50,000	9,154	37,447	12,553	0	12,553	25%
03-41-78700	Utilities -Propane	4,000	29	7,464	-3,464	0	-3,464	0%
03-41-78900	Trash Pick-Up	6,000	2,018	7,635	-1,635	0	-1,635	0%
03-41-82000	Capital Expenditures	0	0	0	0	0	0	0%
	Administration & HR Expense Sub Totals:	**1,202,071**	**210,850**	**1,533,681**	**-331,610**	**31,179**	**-362,789**	**0%**
	Expense Sub Totals:	**2,023,379**	**288,268**	**2,462,551**	**-439,172**	**31,179**	**-470,351**	**0%**
	Department 41 Sub Totals:	**2,023,379**	**288,268**	**2,462,551**	**-439,172**	**31,179**		

General Ledger
Interim Financials
Period: JUNE-17

RAINBOW MUNICIPAL WATER DISTRICT
Committed to Excellence

Account Number		Description	Budget Amount	Period Amount	YTD Amount	YTD Variance	Encumbered Amount	Amount Available	% Available
Department	**03-43**	**SAFETY**							
		Payroll & Employee Expenses							
03-43-56101		Regular Salaries	71,615	5,289	72,873	-1,258	0	-1,258	0%
03-43-56103		Overtime Paid, Comp Time Earn.	300	0	275	25	0	25	8%
03-43-56501		Employer'S Share Fica Ssi	4,440	312	4,286	154	0	154	3%
03-43-56502		Employer'S Share Fica Medicare	1,038	79	1,093	-55	0	-55	0%
03-43-56503		Medical Ins Acwa Health Ben	9,344	991	10,963	-1,619	0	-1,619	0%
03-43-56504		Dental Insurance	1,687	143	1,471	216	0	216	13%
03-43-56505		Vision Ins Acwa	228	18	220	8	0	8	4%
03-43-56506		Life, S/T,L/T Disability Ins	1,080	0	0	1,080	0	1,080	100%
03-43-56507		Retirement-Calpers	11,960	516	7,102	4,858	0	4,858	41%
03-43-56512		Employee Training/Tuition Reim	350	0	120	230	0	230	66%
03-43-56515		Worker'S Compensation Ins	2,912	0	1,850	1,062	0	1,062	36%
03-43-56516		State Unemployment Ins, E.T.T.	252	0	228	24	0	24	10%
03-43-56520		Deferred Comp-Employer Contrib	2,600	198	2,662	-62	0	-62	0%
03-43-56524		Other Post Employment Benefits	0	0	0	0	0	0	0%
		Payroll & Employee Expense Sub Totals:	**107,806**	**7,546**	**103,142**	**4,664**	**0**	**4,664**	**4%**
		Safety Expenses							
03-43-63100		Equipment Maintenance	8,000	194	3,935	4,065	0	4,065	51%
03-43-63102		Equipment Maintenance Contract	21,200	1,213	16,534	4,666	0	4,666	22%
03-43-72000		Supplies And Services	16,500	1,170	18,094	-1,594	10,194	-11,788	0%
03-43-72200		Books And Resources	200	0	0	200	0	200	100%
03-43-72400		Dues And Subscriptions	800	0	2,146	-1,346	0	-1,346	0%
03-43-72500		Safety Supplies	25,000	2,298	27,866	-2,866	7,906	-10,772	0%
03-43-73000		Small Tools And Equipment	300	0	0	300	0	300	100%
03-43-75300		Travel/Conferences/Training	2,000	13	947	1,053	0	1,053	53%
		Safety Expenses Sub Totals:	**74,000**	**4,889**	**69,523**	**4,477**	**18,100**	**-13,623**	**0%**
		Expense Sub Totals:	**181,806**	**12,434**	**172,665**	**9,141**	**18,100**	**-8,959**	**0%**
		Department 43 Sub Totals:	**181,806**	**12,434**	**172,665**	**9,141**	**18,100**		

General Ledger
Interim Financials
Period: JUNE-17

RAINBOW MUNICIPAL WATER DISTRICT
Committed to Excellence

Account Number		Description	Budget Amount	Period Amount	YTD Amount	YTD Variance	Encumbered Amount	Amount Available	% Available
Department	**03-51**	**FINANCE**							
		Payroll & Employee Expenses							
03-51-56101		Regular Salaries	350,641	30,092	301,771	48,871	0	48,871	14%
03-51-56103		Overtime Paid, Comp Time Earn.	200	641	6,983	-6,783	0	-6,783	0%
03-51-56501		Employer'S Share Fica Ssi	21,740	1,816	18,169	3,571	0	3,571	16%
03-51-56502		Employer'S Share Fica Medicare	5,084	455	4,597	487	0	487	10%
03-51-56503		Medical Ins Acwa Health Ben	33,446	4,956	33,766	-320	0	-320	0%
03-51-56504		Dental Insurance	4,494	417	2,733	1,761	0	1,761	39%
03-51-56505		Vision Ins Acwa	913	91	754	159	0	159	17%
03-51-56506		Life, S/T,L/T Disability Ins	5,136	0	0	5,136	0	5,136	100%
03-51-56507		Retirement-Calpers	58,557	2,572	25,973	32,584	0	32,584	56%
03-51-56512		Employee Training/Tuition Reim	2,400	0	0	2,400	0	2,400	100%
03-51-56515		Worker'S Compensation Ins	13,421	0	9,059	4,362	0	4,362	33%
03-51-56516		State Unemployment Ins, E.T.T.	1,008	0	1,179	-171	0	-171	0%
03-51-56520		Deferred Comp-Employer Contrib	10,400	942	9,083	1,317	0	1,317	13%
03-51-56524		Other Post Employment Benefits	3,168	0	0	3,168	0	3,168	100%
		Payroll & Employee Expense Sub Totals:	**510,608**	**41,981**	**414,067**	**96,541**	**0**	**96,541**	**19%**
		Finance Expenses							
03-51-69000		Postage	46,500	12,412	46,849	-349	0	-349	0%
03-51-70100		Annual Audit Services	15,000	0	16,495	-1,495	0	-1,495	0%
03-51-70400		Bank Service Charges	42,000	0	42,631	-631	0	-631	0%
03-51-72000		Supplies And Services	100	0	0	100	0	100	100%
03-51-72700		Printing And Reproductions	2,000	0	124	1,876	0	1,876	94%
03-51-75300		Travel/Conferences/Training	2,500	0	764	1,736	0	1,736	69%
		Finance Expenses Sub Totals:	**108,100**	**12,412**	**106,862**	**1,238**	**0**	**1,238**	**1%**
		Expense Sub Totals:	**618,708**	**54,393**	**520,929**	**97,779**	**0**	**97,779**	**16%**
		Department 51 Sub Totals:	**618,708**	**54,393**	**520,929**	**97,779**	**0**		

General Ledger
Interim Financials
Period: JUNE-17

RAINBOW MUNICIPAL WATER DISTRICT
Committed to Excellence

Account Number		Description	Budget Amount	Period Amount	YTD Amount	YTD Variance	Encumbered Amount	Amount Available	% Available
Department	**03-52**	**CUSTOMER SERVICE**							
		Payroll & Employee Expenses							
03-52-56101		Regular Salaries	155,878	10,126	160,928	-5,050	0	-5,050	0%
03-52-56103		Overtime Paid, Comp Time Earn.	3,500	732	10,433	-6,933	0	-6,933	0%
03-52-56501		Employer'S Share Fica Ssi	9,664	639	10,060	-396	0	-396	0%
03-52-56502		Employer'S Share Fica Medicare	2,260	160	2,534	-274	0	-274	0%
03-52-56503		Medical Ins Acwa Health Ben	35,779	2,031	35,720	59	0	59	0%
03-52-56504		Dental Insurance	5,060	231	3,138	1,922	0	1,922	38%
03-52-56505		Vision Ins Acwa	685	43	713	-28	0	-28	0%
03-52-56506		Life, S/T,L/T Disability Ins	2,321	0	0	2,321	0	2,321	100%
03-52-56507		Retirement-Calpers	26,032	890	12,673	13,359	0	13,359	51%
03-52-56512		Employee Training/Tuition Reim	1,000	0	0	1,000	0	1,000	100%
03-52-56515		Worker'S Compensation Ins	5,966	0	4,027	1,939	0	1,939	32%
03-52-56516		State Unemployment Ins, E.T.T.	756	0	739	17	0	17	2%
03-52-56520		Deferred Comp-Employer Contrib	7,800	314	5,100	2,700	0	2,700	35%
03-52-56524		Other Post Employment Benefits	1,683	0	0	1,683	0	1,683	100%
		Payroll & Employee Expense Sub Totals:	**258,384**	**15,166**	**246,064**	**12,320**	**0**	**12,320**	**5%**
		Customer Service Expenses							
03-52-63100		Equipment Maintenance	300	0	0	300	0	300	100%
03-52-69110		Bad Debt Exp/Billing Adjust'S	20,000	0	324	19,676	0	19,676	98%
03-52-72000		Supplies And Services	159,000	3,712	156,151	2,849	0	2,849	2%
03-52-72700		Printing And Reproductions	3,000	0	832	2,168	0	2,168	72%
03-52-75300		Travel/Conferences/Training	1,000	408	408	592	0	592	59%
		Customer Service Expenses Sub Totals:	**183,300**	**4,121**	**157,716**	**25,584**	**0**	**25,584**	**14%**
		Expense Sub Totals:	**441,684**	**19,287**	**403,780**	**37,904**	**0**	**37,904**	**9%**
		Department 52 Sub Totals:	**441,684**	**19,287**	**403,780**	**37,904**	**0**		

General Ledger
Interim Financials
Period: JUNE-17

RAINBOW MUNICIPAL WATER DISTRICT
Committed to Excellence

Account Number		Description	Budget Amount	Period Amount	YTD Amount	YTD Variance	Encumbered Amount	Amount Available	% Available
Department	**03-91**	**ENGINEERING**							
		Payroll & Employee Expenses							
03-91-56101		Regular Salaries	518,020	37,199	455,079	62,941	0	62,941	12%
03-91-56103		Overtime Paid, Comp Time Earn.	4,000	0	1,052	2,948	0	2,948	74%
03-91-56501		Employer'S Share Fica Ssi	32,117	2,153	25,994	6,123	0	6,123	19%
03-91-56502		Employer'S Share Fica Medicare	7,511	541	6,599	912	0	912	12%
03-91-56503		Medical Ins Acwa Health Ben	81,688	6,231	73,427	8,261	0	8,261	10%
03-91-56504		Dental Insurance	8,151	595	6,203	1,948	0	1,948	24%
03-91-56505		Vision Ins Acwa	1,027	88	1,150	-123	0	-123	0%
03-91-56506		Life, S/T,L/T Disability Ins	6,963	0	0	6,963	0	6,963	100%
03-91-56507		Retirement-Calpers	86,509	3,165	40,941	45,568	0	45,568	53%
03-91-56512		Employee Training/Tuition Reim	1,200	1,155	1,465	-265	199	-464	0%
03-91-56515		Worker'S Compensation Ins	20,734	0	13,383	7,351	0	7,351	35%
03-91-56516		State Unemployment Ins, E.T.T.	1,386	0	1,322	64	0	64	5%
03-91-56520		Deferred Comp-Employer Contrib	14,300	949	12,601	1,699	0	1,699	12%
03-91-56524		Other Post Employment Benefits	0	0	0	0	0	0	0%
		Payroll & Employee Expense Sub Totals:	**783,606**	**52,075**	**639,216**	**144,390**	**199**	**144,191**	**18%**
		Engineering Expenses							
03-91-63000		Equipment	4,000	0	0	4,000	0	4,000	100%
03-91-63102		Equipment Maintenance Contract	102,310	415	63,608	38,702	0	38,702	38%
03-91-70000		Professional Services	200,000	101,604	370,547	-170,547	0	-170,547	0%
03-91-72000		Supplies And Services	21,134	53,043	132,881	-111,747	43,446	-155,192	0%
03-91-72200		Books And Resources	500	0	215	286	0	286	57%
03-91-72400		Dues And Subscriptions	765	0	382	383	0	383	50%
03-91-72700		Printing And Reproductions	1,000	0	873	127	0	127	13%
03-91-75300		Travel/Conferences/Training	5,000	2,540	5,202	-202	0	-202	0%
		Engineering Expenses Sub Totals:	**334,709**	**157,602**	**573,707**	**-238,998**	**43,446**	**-282,444**	**0%**
		Expense Sub Totals:	**1,118,315**	**209,677**	**1,212,923**	**-94,608**	**43,645**	**-138,253**	**0%**
		Department 91 Sub Totals:	**1,118,315**	**209,677**	**1,212,923**	**-94,608**	**43,645**		
		Fund Revenue Sub Totals:	**5,062,000**	**28,134**	**4,771,087**	**290,913**	**0**	**290,913**	**6%**

General Ledger
Interim Financials
Period: JUNE-17

RAINBOW MUNICIPAL WATER DISTRICT
Committed to Excellence

Account Number	Description	Budget Amount	Period Amount	YTD Amount	YTD Variance	Encumbered Amount	Amount Available	% Available
	Fund Expense Sub Totals:	5,054,771	643,789	5,386,742	-331,971	190,790	-522,761	0%
	Fund 03 Sub Totals:	-7,229	615,655	615,655	-622,884	190,790		
	Revenue Totals:	42,947,400	3,419,552	40,285,520	2,661,880	0	2,661,880	6%
	Expense Totals:	37,987,984	3,590,680	40,878,803	-2,890,819	188,886	-3,079,705	0%
	Report Totals:	-4,959,416	171,129	593,283	-5,552,699	188,886		

Accounts Payable

June American Express

RAINBOW MUNICIPAL WATER DISTRICT
Committed to Excellence

Check Number	Check Date			Amount
245 - ABCANA INDUSTRIES Line Item Account				
7101701	07/10/2017			
Inv 1006438				
Line Item Date	Line Item Description		Line Item Account	
05/25/2017	HYPOCHLORITE SOLUTION 12.25% 8 PG III		01-32-72000	1,195.98
Inv 1006438 Total				1,195.98
Inv 1006638				
Line Item Date	Line Item Description		Line Item Account	
05/26/2017	HYPOCHLORITE SOLUTION 8 PG III, 55GAL DRUM		01-32-72000	696.64
Inv 1006638 Total				696.64
Inv 1006773				
Line Item Date	Line Item Description		Line Item Account	
05/30/2017	HYPOCHLORITE SOLUTION 12.5% 8PG III		01-32-72000	523.24
Inv 1006773 Total				523.24
Inv 1006995				
Line Item Date	Line Item Description		Line Item Account	
06/01/2017	HYPOCHLORITE SOLUTION 12.5% 8 PG III		01-32-72000	859.62
Inv 1006995 Total				859.62
Inv 1008063				
Line Item Date	Line Item Description		Line Item Account	
06/20/2017	HYPOCHLORITE SOLUTION 12.5% 8 PG III		01-32-72000	896.99
Inv 1008063 Total				896.99
Inv C109877				
Line Item Date	Line Item Description		Line Item Account	
05/31/2017	CREDIT		01-32-72000	-250.00
Inv C109877 Total				-250.00
7101701 Total:				3,922.47
245 - ABCANA INDUSTRIES Total:				3,922.47

Check Number	Check Date	Amount

280 - AMAZON.COM Line Item Account

7101702 07/10/2017

Inv 3872384-6849038

Line Item Date	Line Item Description	Line Item Account	
06/23/2017	BATTERY REPLACEMENT FOR TWO-WAY RADIO	03-36-73000	47.98
Inv 3872384-6849038 Total			47.98

Inv 6827900-3300266

Line Item Date	Line Item Description	Line Item Account	
06/08/2017	MCSPROAUDIO GAUGE SPEAKER CABLES AND OTTERBO)	03-41-60100	58.79
Inv 6827900-3300266 Total			58.79

Inv 7972529-1011415

Line Item Date	Line Item Description	Line Item Account	
06/06/2017	KEYBOARD FOR IPAD AND IPAD CASE	03-41-60100	150.75
Inv 7972529-1011415 Total			150.75

Inv 8041224-2745042

Line Item Date	Line Item Description	Line Item Account	
06/19/2017	LED HEADLAMP-HEADLIGHT FLASHLIGHT TORCH, RECH/	03-36-73000	87.96
Inv 8041224-2745042 Total			87.96

Inv 8909994-5201813

Line Item Date	Line Item Description	Line Item Account	
06/12/2017	XEROX IMAGING DRUM CARTRIDGE	03-41-72900	156.62
Inv 8909994-5201813 Total			156.62

7101702 Total: 502.10

280 - AMAZON.COM Total: 502.10

603346 - BEST BUY Line Item Account

7101703 07/10/2017

Inv 802069000811

Line Item Date	Line Item Description	Line Item Account	
06/14/2017	LG TONE ULTRA HEADSET	03-41-60100	86.19
Inv 802069000811 Total			86.19

7101703 Total: 86.19

603346 - BEST BUY Total: 86.19

Check Number	Check Date	Amount

4970 - BRADY SAND & MATERIAL, INC. Line Item Account

7101704 07/10/2017

Inv 201706-10

Line Item Date	Line Item Description	Line Item Account	
06/14/2017	CLASS II THE YARD FT BILL 75319	01-34-72000	1,218.82
Inv 201706-10 Total			1,218.82

Inv 201706-7

Line Item Date	Line Item Description	Line Item Account	
06/09/2017	CLASS II, THE YARD FT BILL 75314	01-34-72000	1,248.58
Inv 201706-7 Total			1,248.58

Inv 201706-8

Line Item Date	Line Item Description	Line Item Account	
06/14/2017	3/4" CR, THE YARD FT BILL 75315	01-34-72000	743.05
Inv 201706-8 Total			743.05

Inv 201706-9

Line Item Date	Line Item Description	Line Item Account	
06/16/2017	CLASS II ON JOB SITE FT BILL 75317	01-34-72000	2,434.35
Inv 201706-9 Total			2,434.35
7101704 Total:			5,644.80
4970 - BRADY SAND & MATERIAL, INC. Total:			5,644.80

2075 - C.U.W.C.C. Line Item Account

7101705 07/10/2017

Inv 597

Line Item Date	Line Item Description	Line Item Account	
05/30/2017	PEER TO PEER 2017 PLENARY SESSION 5/31/17-6/1/17: C GR/	03-41-75300	105.00
Inv 597 Total			105.00
7101705 Total:			105.00
2075 - C.U.W.C.C. Total:			105.00

1575 - CDW GOVERNMENT, INC. Line Item Account

7101706 07/10/2017

Inv 1BRF12P

Line Item Date	Line Item Description	Line Item Account	
06/13/2017	ADDONICS HDD DUPLICATOR PRO HARD DRIVE	03-41-60100	439.57
Inv 1BRF12P Total			439.57

Check Number	Check Date			Amount
7101706 Total:				439.57
1575 - CDW GOVERNMENT, INC. Total:				439.57
2885 - CORELOGIC INFORMATION Line Item Account				
7101707	07/10/2017			
Inv 81805915				
Line Item Date	Line Item Description		Line Item Account	
05/31/2017	REALQUEST.COM MAP SEARCH, GEOGRAPHIC MAP SEARC		03-91-63102	192.50
Inv 81805915 Total				192.50
Inv 81806751				
Line Item Date	Line Item Description		Line Item Account	
05/31/2017	REALQUEST.COM SALE DOC IMAGE		03-91-63102	30.00
Inv 81806751 Total				30.00
7101707 Total:				222.50
2885 - CORELOGIC INFORMATION Total:				222.50
2027 - CULLIGAN OF ESCONDIDO Line Item Account				
7101708	07/10/2017			
Inv 053117				
Line Item Date	Line Item Description		Line Item Account	
05/31/2017	WATER SOFTNER, SERVICE PERIOD: 06/01-06/30		03-41-63401	72.93
Inv 053117 Total				72.93
7101708 Total:				72.93
2027 - CULLIGAN OF ESCONDIDO Total:				72.93
2760 - FALLBROOK CHAMBER OF COMMERCE Line Item Account				
7101709	07/10/2017			
Inv 60195980906				
Line Item Date	Line Item Description		Line Item Account	
06/14/2017	2018 AVOCADO FESTIVAL BOOTH RECEIPT #129		03-41-72400	100.00
Inv 60195980906 Total				100.00
7101709 Total:				100.00
2760 - FALLBROOK CHAMBER OF COMMERCE Total:				100.00

Check Number	Check Date	Amount

3325 - GRAINGER, W.W. INC. Line Item Account

7101710 07/10/2017

Inv 9465784545

Line Item Date	Line Item Description	Line Item Account	
06/07/2017	PA1000 - BLACK MARKING PAINT	01-00-14610	78.36
06/07/2017	K1045 - DUCT TAPE	01-00-14610	145.07
06/07/2017	PA1016 - SAFETY YELLOW SPRAY PAINT	01-00-14610	118.31
06/07/2017	PA1004 - BLUE MARKING PAINT	01-00-14610	75.77
06/07/2017	K1049 - PAINT BRUSH, FLAT SASH, 3"	01-00-14610	37.50
06/07/2017	PA1002 - WHITE MARKING PAINT	01-00-14610	37.88
06/07/2017	K1089 - TFE PIPE THREAD SEALANT WITH PTFE	01-00-14610	131.20
06/07/2017	PA1023 - GLOSS BLACK SPRAY PAINT	01-00-14610	57.02
06/07/2017	PA1019 - FLAT WHITE SPRY PAINT	01-00-14610	36.85
06/07/2017	PA1024 - GREEN MARKING PAINT	01-00-14610	39.18
06/07/2017	K1046 - ELECTRICAL TAPE	01-00-14610	53.66
06/07/2017	PA1022 - SAFETY RED SPRAY PAINT	01-00-14610	118.31
06/07/2017	PA1005 - WD 40, LUBRICANT, AEROSOL CAN 8 OZ.	01-00-14610	106.93
06/07/2017	PA1043 - WHITE GLOSS SPRAY PAINT	01-00-14610	118.31

Inv 9465784545 Total 1,154.35

Inv 9465784552

Line Item Date	Line Item Description	Line Item Account	
06/07/2017	FIRST AID TAPE, ASPIRIN, ANTIBIOTIC OINTMENT, ANTISE	03-43-72500	525.89

Inv 9465784552 Total 525.89

Inv 9465784560

Line Item Date	Line Item Description	Line Item Account	
06/07/2017	1-1/2" ABRASIVE ROLL	01-00-14610	362.56

Inv 9465784560 Total 362.56

7101710 Total: 2,042.80

3325 - GRAINGER, W.W. INC. Total: 2,042.80

4847 - MEASUREMENT SPECIALTIES INC Line Item Account

7101711 07/10/2017

Inv HC68570

Line Item Date	Line Item Description	Line Item Account	
06/14/2017	PRESSURE TRANSDUCER	02-61-72000	425.61

Inv HC68570 Total 425.61

Inv HC68570-SH

Line Item Date	Line Item Description	Line Item Account	
06/16/2017	SHIPPING FEE	02-61-72000	15.00

Inv HC68570-SH Total 15.00

Check Number	Check Date			Amount
7101711 Total:				440.61
4847 - MEASUREMENT SPECIALTIES INC Total:				440.61
5286 - NOSSAMAN, LLP Line Item Account				
7101712	07/10/2017			
Inv 466470				
Line Item Date	Line Item Description		Line Item Account	
05/18/2017	SPECIAL COUNSEL SERVICES THRU 4/30/17: SPECIAL TAX (		03-41-70300	405.00
Inv 466470 Total				405.00
Inv 466471				
Line Item Date	Line Item Description		Line Item Account	
05/18/2017	GENERAL COUNSEL SERVICES RENDERED THROUGH 4/30/		03-41-70300	284.00
05/18/2017	GENERAL COUNSEL SERVICES RENDERED THROUGH 4/30/		03-91-72000	142.00
05/18/2017	GENERAL COUNSEL SERVICES RENDERED THROUGH 4/30/		03-91-72000	461.50
05/18/2017	GENERAL COUNSEL SERVICES RENDERED THROUGH 4/30/		03-91-72000	248.50
05/18/2017	GENERAL COUNSEL SERVICES RENDERED THROUGH 4/30/		03-91-70000	1,704.00
05/18/2017	GENERAL COUNSEL SERVICES RENDERED THROUGH 4/30/		03-41-70300	6,709.50
05/18/2017	GENERAL COUNSEL SERVICES RENDERED THROUGH 4/30/		03-41-70300	887.50
05/18/2017	GENERAL COUNSEL SERVICES RENDERED THROUGH 4/30/		03-41-70300	284.00
05/18/2017	GENERAL COUNSEL SERVICES RENDERED THROUGH 4/30/		03-41-70300	1,704.00
Inv 466471 Total				12,425.00
Inv 466472				
Line Item Date	Line Item Description		Line Item Account	
05/18/2017	GENERAL COUNSEL SERVICES RENDERED THROUGH 4/30/		03-41-70300	5,947.50
05/18/2017	GENERAL COUNSEL SERVICES RENDERED THROUGH 4/30/		03-41-70300	2,242.50
05/18/2017	GENERAL COUNSEL SERVICES RENDERED THROUGH 4/30/		03-41-70300	97.50
Inv 466472 Total				8,287.50
7101712 Total:				21,117.50
5286 - NOSSAMAN, LLP Total:				21,117.50
5425 - OFFICE DEPOT Line Item Account				
7101713	07/10/2017			
Inv 934553619001				
Line Item Date	Line Item Description		Line Item Account	
06/09/2017	TONER, MEMO BOOK, DUSTER, PEN, ERASER, MISC SUPPL		03-41-72000	565.92
Inv 934553619001 Total				565.92
Inv 934556134001				
Line Item Date	Line Item Description		Line Item Account	
06/09/2017	MECHANICAL PENCIL		03-41-72000	40.29

Check Number	Check Date			Amount
Inv 934556134001 Total				40.29
7101713 Total:				606.21
5425 - OFFICE DEPOT Total:				606.21

603143 - PROFLOWERS Line Item Account

7101714 07/10/2017

Inv 110299442373

Line Item Date	Line Item Description	Line Item Account	
05/25/2017	SYMPATHY GIFT FOR EMPLOYEE -RDR	03-41-56513	74.86
Inv 110299442373 Total			74.86

Inv 110682047949

Line Item Date	Line Item Description	Line Item Account	
06/08/2017	SYMPATHY GIFT FOR EMPLOYEE -RL	03-41-56513	74.86
Inv 110682047949 Total			74.86
7101714 Total:			149.72
603143 - PROFLOWERS Total:			149.72

5976 - PRUDENTIAL OVERALL SUPPLY Line Item Account

7101715 07/10/2017

Inv 130749277

Line Item Date	Line Item Description	Line Item Account	
05/30/2017	MONTHLY UNIFORMS	03-41-56511	123.10
05/30/2017	MATS & MISC	03-41-63401	6.62
Inv 130749277 Total			129.72

Inv 130749278

Line Item Date	Line Item Description	Line Item Account	
05/30/2017	MONTHLY UNIFORMS	03-41-56511	93.46
Inv 130749278 Total			93.46

Inv 130750798

Line Item Date	Line Item Description	Line Item Account	
06/06/2017	MATS & MISC	03-41-63401	138.83
06/06/2017	MONTHLY UNIFORMS	03-41-56511	134.68
Inv 130750798 Total			273.51

Inv 130750799

Line Item Date	Line Item Description	Line Item Account	
06/06/2017	MONTHLY UNIFORMS	03-41-56511	93.97

Check Number	Check Date	Amount

Inv 130750799 Total 93.97

Inv 130752414

Line Item Date	Line Item Description	Line Item Account	
06/13/2017	MATS & MISC	03-41-63401	6.62
06/13/2017	MONTHLY UNIFORMS	03-41-56511	127.83

Inv 130752414 Total 134.45

Inv 130752415

Line Item Date	Line Item Description	Line Item Account	
06/13/2017	MONTHLY UNIFORMS	03-41-56511	95.43

Inv 130752415 Total 95.43

Inv 130753987

Line Item Date	Line Item Description	Line Item Account	
06/20/2017	MONTHLY UNIFORMS	03-41-56511	131.40
06/20/2017	MATS & MISC	03-41-63401	138.83

Inv 130753987 Total 270.23

Inv 130753988

Line Item Date	Line Item Description	Line Item Account	
06/20/2017	MONTHLY UNIFORMS	03-41-56511	98.89

Inv 130753988 Total 98.89

7101715 Total: 1,189.66

5976 - PRUDENTIAL OVERALL SUPPLY Total: 1,189.66

603342 - THINGS REMEMBERED Line Item Account

7101716 07/10/2017

Inv 10853233

Line Item Date	Line Item Description	Line Item Account	
05/30/2017	LARGE ENGRAVED BURNING FLAME ART GLASS AWARD	03-41-56513	187.06

Inv 10853233 Total 187.06

7101716 Total: 187.06

603342 - THINGS REMEMBERED Total: 187.06

8155 - WESTERN WATER WORKS SUPPLY Line Item Account

7101717 07/10/2017

Inv 454711-00

Line Item Date	Line Item Description	Line Item Account

Check Number	Check Date			Amount
06/06/2017		CARSON BLACK 1730-12 METER BOX	01-00-14610	3,394.13
06/06/2017		CARSON BLACK METER BOX LID - NO BOLT DOWN	01-00-14610	3,103.20
Inv 454711-00 Total				6,497.33
7101717 Total:				6,497.33
8155 - WESTERN WATER WORKS SUPPLY Total:				6,497.33
3695 - HOME DEPOT Line Item Account				
Line Item Date	Line Item Description		Line Item Account	
06/21/2017	CREDIT			-48.27
Inv CW593477872 Total				-48.27
3695 - HOME DEPOT Total:				-48.27
Total:				43,278.17

Director's Expenses
FY 2016-2017

Disbursement Date	Description	Dennis Sanford	Helene Brazier	Tory Walker	Richard Bigley	William Stewart	Retiree
07/31/16	CAL PERS - HEALTH INS.						$ 367.52
	WATER AGENCIES ASSOC OF S.D.						
	CSDA,SAN DIEGO CHAPTER						
	CONFERENCES (CSDA, ACWA, etc.)	$ 695.00				$ 695.00	
	TRAINING						
	COUNCIL OF WATER UTILITIES			$ 25.00		$ 25.00	
	DIRECTORS' PER DIEMS	$ 150.00	$ 150.00	$ 150.00	$ 150.00	$ 150.00	
	TRAVEL EXPENSES						
	MILEAGE EXPENSE						
	REIMBURSEMENT FROM DIRECTORS						$ (367.52)
	Monthly Totals	$ 845.00	$ 150.00	$ 175.00	$ 150.00	$ 870.00	$ -
08/31/16	CAL PERS - HEALTH INS.						$ 367.52
	WATER AGENCIES ASSOC OF S.D.						
	CSDA,SAN DIEGO CHAPTER						
	CONFERENCES (CSDA, ACWA, etc.)						
	TRAINING						
	COUNCIL OF WATER UTILITIES						
	DIRECTORS' PER DIEMS	$ 150.00	$ 150.00			$ 150.00	
	TRAVEL EXPENSES						
	MILEAGE EXPENSE						
	REIMBURSEMENT FROM DIRECTORS						$ (367.52)
	Monthly Totals	$ 150.00	$ 150.00	$ -	$ -	$ 150.00	$ -

Director's Expenses
FY 2016-2017

		Dennis Sanford	Helene Brazier	Tory Walker	Richard Bigley	William Stewart	Retiree
09/30/16	CAL PERS - HEALTH INS.						$ 367.52
	WATER AGENCIES ASSOC OF S.D.						
	CSDA,SAN DIEGO CHAPTER						
	CONFERENCES (CSDA, ACWA, etc.)						
	TRAINING						
	COUNCIL OF WATER UTILITIES			$ 25.00			
	DIRECTORS' PER DIEMS	$ 150.00	$ 150.00	$ 300.00		$ 150.00	
	TRAVEL EXPENSES						
	MILEAGE AND EXPENSES						
	REIMBURSEMENT FROM DIRECTORS						$ (367.52)
	Monthly Totals	$ 150.00	$ 150.00	$ 325.00	$ -	$ 150.00	$ -
10/31/16	CAL PERS - HEALTH INS.						$ 367.52
	WATER AGENCIES ASSOC OF S.D.						
	CSDA,SAN DIEGO CHAPTER						
	CONFERENCES (CSDA, ACWA, etc.)				$ 580.00	$ 580.00	
	TRAINING						
	COUNCIL OF WATER UTILITIES			$ 25.00			
	DIRECTORS' PER DIEMS	$ 300.00	$ 150.00	$ 150.00	$ 150.00	$ 150.00	
	TRAVEL EXPENSES					$ 545.08	
	MILEAGE AND EXPENSES					$ 53.46	
	REIMBURSEMENT FROM DIRECTORS						$ (367.52)
	Monthly Totals	$ 300.00	$ 150.00	$ 175.00	$ 730.00	$ 1,328.54	$ -

Director's Expenses
FY 2016-2017

		Dennis Sanford	Helene Brazier	Tory Walker	Richard Bigley	William Stewart	Retiree
11/30/16	CAL PERS - HEALTH INS.						$ 367.52
	WATER AGENCIES ASSOC OF S.D.						
	CSDA,SAN DIEGO CHAPTER						
	CONFERENCES (CSDA, ACWA, etc.)			$ 50.00		$ 757.00	
	TRAINING						
	COUNCIL OF WATER UTILITIES						
	DIRECTORS' PER DIEMS						
	TRAVEL EXPENSES				$ 235.54	$ 504.42	
	MILEAGE EXPENSE					$ 81.44	
	REIMBURSEMENT FROM DIRECTORS						$ (367.52)
	Monthly Totals	$ -	$ -	$ 50.00	$ 235.54	$ 1,342.86	$ -
12/31/16	CAL PERS - HEALTH INS.						$ 367.52
	WATER AGENCIES ASSOC OF S.D.						
	CSDA,SAN DIEGO CHAPTER						
	CONFERENCES (CSDA, ACWA, etc.)						
	TRAINING						
	COUNCIL OF WATER UTILITIES						
	DIRECTORS' PER DIEMS	$ 150.00	$ 150.00	$ 300.00		$ 150.00	
	TRAVEL EXPENSES						
	MILEAGE EXPENSE						
	REIMBURSEMENT FROM DIRECTORS						$ (367.52)
	Monthly Totals	$ 150.00	$ 150.00	$ 300.00	$ -	$ 150.00	$ -

	Dennis Sanford	Helene Brazier	Tory Walker	Richard Bigley	William Stewart	Retiree
REPORT TOTAL (2016):	**$ 1,595.00**	**$ 750.00**	**$ 1,025.00**	**$ 1,115.54**	**$ 3,991.40**	**$ -**

Director's Expenses
FY 2016-2017

Disbursement Date	Description	Miguel Gasca	Helene Brazier	Claude Hamilton	Michael Mack	William Stewart	Retiree
01/31/17	CAL PERS - HEALTH INS.						$ 354.73
	WATER AGENCIES ASSOC OF S.D.						
	CSDA,SAN DIEGO CHAPTER						
	CONFERENCES (CSDA, ACWA, etc.)						
	TRAINING			$ 150.00	$ 150.00		
	COUNCIL OF WATER UTILITIES						
	DIRECTORS' PER DIEMS		$ 150.00	$ 150.00	$ 150.00	$ 150.00	
	TRAVEL EXPENSES						
	MILEAGE EXPENSE			$ 51.30	$ 59.08		
	REIMBURSEMENT FROM DIRECTORS						$ (354.73)
	Monthly Totals	$ -	$ 150.00	$ 351.30	$ 359.08	$ 150.00	$ -
02/28/17	CAL PERS - HEALTH INS.						$ 354.73
	WATER AGENCIES ASSOC OF S.D.						
	CSDA,SAN DIEGO CHAPTER		$ 30.00		$ 30.00		
	CONFERENCES (CSDA, ACWA, etc.)						
	TRAINING						
	COUNCIL OF WATER UTILITIES				$ 25.00		
	DIRECTORS' PER DIEMS	$ 150.00	$ 150.00	$ 300.00	$ 300.00	$ 150.00	
	TRAVEL EXPENSES						
	MILEAGE EXPENSE			$ 23.54	$ 40.66		
	REIMBURSEMENT FROM DIRECTORS						$ (354.73)
	Monthly Totals	$ 150.00	$ 180.00	$ 323.54	$ 395.66	$ 150.00	$ -

Director's Expenses
FY 2016-2017

		Miguel Gasca	Helene Brazier	Claude Hamilton	Michael Mack	William Stewart	Retiree
03/31/17	CAL PERS - HEALTH INS.						$ 354.73
	WATER AGENCIES ASSOC OF S.D.						
	CSDA,SAN DIEGO CHAPTER						
	CONFERENCES (CSDA, ACWA, etc.)						
	TRAINING						
	COUNCIL OF WATER UTILITIES	$ 25.00			$ 25.00		
	DIRECTORS' PER DIEMS	$ 150.00	$ 150.00	$ 150.00	$ 150.00	$ 150.00	
	TRAVEL EXPENSES						
	MILEAGE EXPENSE	$ 31.78			$ 40.66		
	REIMBURSEMENT FROM DIRECTORS						$ (354.73)
	Monthly Totals	$ 206.78	$ 150.00	$ 150.00	$ 215.66	$ 150.00	$ -
04/30/17	CAL PERS - HEALTH INS.						$ 354.73
	WATER AGENCIES ASSOC OF S.D.						
	CSDA,SAN DIEGO CHAPTER						
	CONFERENCES (CSDA, ACWA, etc.)						
	TRAINING						
	COUNCIL OF WATER UTILITIES	$ 25.00				$ 25.00	
	DIRECTORS' PER DIEMS		$ 150.00	$ 300.00	$ 150.00	$ 300.00	
	TRAVEL EXPENSES						
	MILEAGE EXPENSE	$ 31.03		$ 23.54	$ 66.88		
	REIMBURSEMENT FROM DIRECTORS						$ (354.73)
	Monthly Totals	$ 56.03	$ 150.00	$ 323.54	$ 216.88	$ 325.00	$ -

Director's Expenses
FY 2016-2017

		Miguel Gasca	Helene Brazier	Claude Hamilton	Michael Mack	William Stewart	Retiree
05/31/17	CAL PERS - HEALTH INS.						$ 354.73
	WATER AGENCIES ASSOC OF S.D.						
	CSDA-SAN DIEGO CHAPTER		$ 30.00		$ 30.00		
	CONFERENCES (CSDA, ACWA, etc.)	$ 175.00		$ 175.00	$ 874.00	$ 175.00	
	TRAINING						
	COUNCIL OF WATER UTILITIES						
	DIRECTORS' PER DIEMS	$ 150.00	$ 150.00	$ 150.00	$ 600.00	$ 150.00	
	TRAVEL EXPENSES	$ 1,090.47		$ 940.94	$ 1,729.46	$ 927.24	
	MILEAGE EXPENSE	$ 31.03		$ 81.32			
	REIMBURSEMENT FROM DIRECTORS						$ (354.73)
	Monthly Totals	$ 1,446.50	$ 180.00	$ 1,347.26	$ 3,233.46	$ 1,252.24	$ -
06/30/17	CAL PERS - HEALTH INS.						$ 354.73
	WATER AGENCIES ASSOC OF S.D.						
	CSDA-SAN DIEGO CHAPTER						
	CONFERENCES (CSDA, ACWA, etc.)						
	TRAINING						
	COUNCIL OF WATER UTILITIES	$ 25.00				$ 25.00	
	DIRECTORS' PER DIEMS	$ 300.00	$ 300.00	$ 300.00	$ 300.00	$ 300.00	
	TRAVEL EXPENSES						
	MILEAGE EXPENSE						
	REIMBURSEMENT FROM DIRECTORS						$ (354.73)
	Monthly Totals	$ 325.00	$ 300.00	$ 300.00	$ 300.00	$ 325.00	$ -

Director's Expenses
FY 2016-2017

	Miguel Gasca	Helene Brazier	Claude Hamilton	Michael Mack	William Stewart	Retiree
REPORT TOTAL (2017):	**$ 2,184.31**	**$ 1,110.00**	**$ 2,795.64**	**$ 4,720.74**	**$ 2,352.24**	**$ -**

Bank Reconciliation
June Check Register

RAINBOW MUNICIPAL WATER DISTRICT
Committed to Excellence

Check No.	Vendor/Employee	Transaction Description	Date	Amount
Fund: 01 WATER FUND				
Department: 00				
ACH	ASTRA INDUSTRIAL SERV.INC	CSM11-A2-2 SOLENOID CONTROL 120/60	06/12/2017	1,135.62
ACH	CB&T / ACWA-JPIA	MONTHLY HEALTH AND VISION INSURANCE - JUL 2017	06/07/2017	77,617.20
ACH	PLIC-SBD GRAND ISLAND	MONTHLY INSURANCE - JUNE 2017	06/07/2017	10,949.34
ACH	PLIC-SBD GRAND ISLAND	MONTHLY INSURNACE - JULY 2017	06/29/2017	11,112.72
ACH	RENE BUSH	REIMBURSE RETIRED EMPLOYEE HEALTH INS - JUN 2017	06/21/2017	726.00
ACH	SAN DIEGO COUNTY WATER AUTH	WIRE TRANSFER FOR WATER PURCHASES_APR 2017	06/13/2017	2,492,725.50
ACH	CHARLES C. SNEED	REIMBURSE RETIRED EMPLOYEE HEALTH INSURANCE - JUN 2017	06/07/2017	363.00
ACH	KEVIN MILLER	REIMBURSE RETIRED EMPLOYEE HEALTH INS - JUNE 2017	06/07/2017	726.00
ACH	SHERRY MULLENNIX	REIMBURSE RETIRED EMPLOYEE HEALTH INS - JUN 2017	06/14/2017	300.00
53485	FERGUSON WATERWORKS #1083	1" VENT-O-MAT AIR RELEASE VLV P/N - C1800	06/02/2017	7,745.07
53497	JANET FARNUM	Refund Check	06/05/2017	1,264.68
53498	IRAJ ZIATABARI	Refund Check	06/05/2017	36.12
53541	RAYMOND BEATIFICATO	Refund Check	06/14/2017	233.81
53551	RICHARD GIAMMARINARO	Refund Check	06/14/2017	319.37
53561	DAVID SEYMOUR	REIMBURSE RETIRED EMPLOYEE HEALTH INS - JUN 2017	06/14/2017	726.00
53579	SAMUEL & LESLIE ORIZA	Refund Check	06/21/2017	242.24
53590	DEBRA FOUNDS	Refund Check	06/27/2017	338.92
53591	GREYSTONE FINANCIAL SERVICES	Refund Check	06/27/2017	1,751.90
53593	HOCH CONSULTING	AS-NEEDED CONSTRUCTION INSPECTION SERVICES	06/27/2017	24,785.05
53599	FERGUSON WATERWORKS #1083	LF 1" PRV #30, (ITEM #W510XLG)	06/29/2017	13,217.71
53601	HD SUPPLY WATERWORKS, LTD	USSAW 14X125X1 DIAMOND BLADE (GENERAL PURPOSE FOR CONCRETE)	06/29/2017	355.58
53607	RICHARD MATHEWSON	Refund Check	06/29/2017	14.26
		Total for Department: 00		**2,646,686.09**
Department: 31 PUMPING				
53560	SAN DIEGO GAS & ELECTRIC	MONTHLY GAS AND ELECTRIC SERVICE	06/14/2017	43,541.44
53603	HIDDEN VALLEY PUMP SYSTEMS INC	U1 PUMP 3 COORDINATE WITH DELTA MOTOR TO MEET AND PERFORM A FIEL	06/29/2017	950.00
		Total for Department: 31 PUMPING		**44,491.44**
Department: 32 OPERATIONS				
ACH	BABCOCK LABORATORIES, INC	MONTHLY WATER ANALYSIS	06/12/2017	360.00
ACH	BP BATTERY	12VOLT 8AMP HOUR SEALED BATTERY	06/12/2017	174.26
53491	JOE'S HARDWARE	DECK SCRW GREY 3-1LB	06/02/2017	7.15
53501	ANDO PILVE	SWITCH PROGRAMMING (LINK TO MAGEE) & SWITCH SET UP (CEMENT TANK)	06/07/2017	675.00
53515	SAN DIEGO GAS & ELECTRIC	MONTHLY ELECTRIC SERVICE ACCT 7382 505 701 4	06/07/2017	193.25
53521	UNION BANK (VISA)	SOP TRAINING - JOSEPH PERREIRA	06/07/2017	605.00

53525	ED BRADLEY	REIMB FOR TUITION FEES FOR CSUSM WATER FINANCE & PROF RELATIONS	06/12/2017	1,262.00
53526	BUSINESS RADIO LICENSING	UPDATING BUSINESS RADIO LICENSES AND DELETING WIDEBAND EMISSIONS	06/12/2017	75.00
53529	CROP PRODUCTION SVC INC,	LINE HEAD	06/12/2017	71.09
53532	JOE PERREIRA	REIMB FOR TUITION FEES FOR CSUSM WATER FINANCE & PROF RELATIONS	06/12/2017	1,262.00
53538	MARC WALKER	REIMBURSEMENT FOR TUITION FEES FOR UTILITY MANAGEMENT CLASS	06/12/2017	93.10
53543	STEPHEN COFFEY	REIMB FOR TUITION FEES FOR CSUSM WATER FINANCE & PROF RELATIONS	06/14/2017	1,262.00
53549	FEDEX	DELIVERY SERVICE	06/14/2017	11.34
53553	JESUS HERNANDEZ	REIMB FOR TUITION FEES FOR CSUSM WATER FINANCE & PROF RELATIONS	06/14/2017	1,262.00
53555	HOME DEPOT	32OZ BOTTLE, 92 TOOL SET, 6 PCRWSAE	06/14/2017	107.50
53559	RYAN HERCO PRODUCTS CORP	ACR RTMTR 22GPH 50MM P-MNT, 1/8"T SS ENDS/EPDM W/ VALVE	06/14/2017	90.67
53560	SAN DIEGO GAS & ELECTRIC	MONTHLY GAS AND ELECTRIC SERVICE	06/14/2017	730.51
53606	JEFF STACY	REIMB FOR LUNCH ON 6/20/17 FOR GROUP OF 5 FROM AWWA TRAINING	06/29/2017	13.44
53610	SAN DIEGO GAS & ELECTRIC	MONTHLY ELECTRIC SERVICE	06/29/2017	96.93
		Total for Department: 32 OPERATIONS		**8,352.24**

Department: 33 VALVE MAINTENANCE

53550	GERARDO CANCINO	REIMB FOR TUITION FEES FOR WATER TREATMENT PLANT OPS I CLASS	06/14/2017	161.00
53580	POLLARDWATER	MARK FLAG 4X5 BLUE 15 WIRE 1000CT	06/21/2017	314.35
		Total for Department: 33 VALVE MAINTENANCE		**475.35**

Department: 34 WATER DISTRIBUTION

ACH	AIRGAS USA, LLC	CYLINDER RENTAL	06/07/2017	77.13
ACH	AIRGAS USA, LLC	AIRGAS HAZMAT CHARGE	06/21/2017	951.34
ACH	ART'S TRENCH PLATE & KRAIL SERVICE CO, INC.	(2) 8X15 TRENCH PLATE RENTAL, DELIVERY AND PICK UP FEE	06/07/2017	425.20
ACH	ART'S TRENCH PLATE & KRAIL SERVICE CO, INC.	6X12 TRENCH PLATE RENTAL	06/14/2017	869.00
ACH	ART'S TRENCH PLATE & KRAIL SERVICE CO, INC.	7-10' K-RAIL AND 1 TS-7 RENTAL ON 6/14/17, DELIVERY, PICK-UP FEE	06/21/2017	1,685.00
ACH	FALLBROOK EQUIPMENT RENTAL	TRAILER, CONCRETE MIXING, CONCRETE 1/2 YARD-4 SACK MIX	06/07/2017	134.69
ACH	HI-WAY SAFETY RENTALS	BRACE AND BRACKET 48"	06/02/2017	2,654.00
ACH	UNDERGROUND SERVICE ALERT	RAI88 NEW TICKET CHARGES	06/12/2017	148.50
53489	HOME DEPOT	12/3 50'RDGD, 48INBOXLEV, 15PC T-JIG, JIGSAWKIT, D 14PC	06/02/2017	316.62
53521	UNION BANK (VISA)	SOP TRAINING - JOHN MACCARONNE	06/07/2017	395.00
53572	COUNTY OF SAN DIEGO DEPT OF PUBLIC WORKS	B-PERMIT OPENING, INSPECTION/FIELD REVIEW, PROCESSING	06/21/2017	702.50
53589	CHUCK FAUST	SWRCB GRADE 3 WATER DISTRIBUTION OPERATOR CERTIFICATION RENEWAL	06/27/2017	90.00
53594	JOHN MACCARRONE	REIMB FOR TUITION FEES FOR WATER DISTRIBUTION SYSTEM OPS & MAINT	06/27/2017	120.55
53597	SCOTT TERRELL	SWRCB GRADE 3 WATER DISTRIBUTION OPERATOR CERTIFICATION RENEWAL	06/27/2017	90.00
53600	FIREHOSEDIRECT.COM FIRERESQ, INC	ALUMINUM 2 1/2" FEMALE NH TO 1 1/2" MALE NH	06/29/2017	2,410.48
53604	HOME DEPOT	2X8-10 GDF, 2X8-8 GDF, 3/8X10 REBAR, WEDGE ANCHOR, 3GLDSCRW1LB	06/29/2017	129.27
53609	RAIN FOR RENT RIVERSIDE	RENTAL - PUMPS, PIPES, TANKS, FILTRATION	06/29/2017	738.00
		Total for Department: 34 WATER DISTRIBUTION		**11,937.28**

Department: 35 METER SERVICES

53488	CHRIS HOELSCHER	REIMB FOR BACKFLOW PREVENTION ASSEMBLY GENERAL TESTER CERT RENWL	06/02/2017	361.00
53492	KNOCKOUT PEST CONTROL& TERMITE, INC.	REMOVE BEES AND BEE HIVES	06/02/2017	125.00
53493	MCCALL'S METER SALES & SERVICE	HORIZON, HERSHEY METER-CERTIFIED FLOW TEST	06/02/2017	2,410.00
53516	TEMECULA VALLEY BACKFLOW, INC.	BACKFLOW ASSEMBLY REPAIR-REPLACED #1 & #2 AND (2) RUBBER KITS	06/07/2017	374.00
53535	TEMECULA VALLEY BACKFLOW, INC.	ANNUAL BACKFLOW PREVENTION DEVICE TESTING/REPAIR SERVICES	06/12/2017	61,214.00
53547	FALLBROOK AUTO PARTS	BLADE	06/14/2017	39.85
53556	KNOCKOUT PEST CONTROL& TERMITE, INC.	ONE TIME PEST CONTROL	06/14/2017	1,125.00
53563	CLEMMON TAYLOR	REIMBURSEMENT FOR TUITION FEES FOR ENG50-INTRO TO COMP CLASS	06/14/2017	120.93

		Total for Department: 25 WATER SERVICES		**65,769.78**
		Total for Fund:01 WATER FUND		**2,777,712.18**
Fund: 02 SEWER FUND				
Department: 00				
53607	RICHARD MATHEWSON	Refund Check	06/29/2017	3.28
		Total for Department: 00		**3.28**
Department: 61 WASTEWATER				
ACH	ATLAS PUMPING SERVICE	MONTHLY BIN RENTAL	06/07/2017	210.00
ACH	BABCOCK LABORATORIES, INC	MONTHLY WATER ANALYSIS	06/12/2017	155.00
ACH	CITY OF OCEANSIDE	RAINBOW WASTEWATER AGREEMENT, RMWD JUN 2017 INV FY1617	06/12/2017	67,974.19
53483	ANDO PILVE	12/1/16-NETWORK DIAGNOSIS AND RADIO OPTIMIZATION FOR STALLION	06/02/2017	150.00
53489	HOME DEPOT	25 FT CORD	06/02/2017	67.80
53496	TELEDYNE INSTRUMENT, INC.	1 BOTTLE CONFIGURATION INCLUDES 2.5 GALLON, 10 LITER, ROUND BOTT	06/02/2017	7,659.95
53514	RUBEN LOPEZ	REIMBURSEMENT FOR TUITION FEES FOR WATER DISTRBTN I/II/III/IV/V	06/07/2017	288.00
53515	SAN DIEGO GAS & ELECTRIC	MONTHLY ELECTRIC SERVICE ACCT 9380 440 512 5	06/07/2017	7.00
53523	WEST COAST SAFETY SUPPLY CO.	ZONE DEFENSE, 30LB PAIL OF POWDER, COCKROACH CONTROL, WITH SPECI	06/07/2017	210.93
53534	RHO MONSERATE C.C.H.A.	ELECTRIC CHARGE	06/12/2017	328.27
53544	CWEA	ANNUAL MEMBERSHIP RENEWAL FOR MARK WALKER #000292788I	06/14/2017	172.00
53558	RAMON ZUNIGA	REIMBURSEMENT FOR TUITION FEES FOR UTILITY MANAGEMENT CLASS	06/14/2017	50.00
53560	SAN DIEGO GAS & ELECTRIC	MONTHLY GAS AND ELECTRIC SERVICE	06/14/2017	4,418.87
53565	WATER QUALITY SPECIALISTS	MONTHLY OPERATIONS - MAY 2017	06/14/2017	1,950.00
53604	HOME DEPOT	(4) DOOR PULL	06/29/2017	19.05
		Total for Department: 61 WASTEWATER		**83,661.06**
		Total for Fund:02 SEWER FUND		**83,661.06**
Fund: 03 GENERAL FUND				
Department: 00				
ACH	CB&T / ACWA-JPIA	MONTHLY HEALTH AND VISION INSURANCE - JUL 2017	06/07/2017	18.56
ACH	PLIC-SBD GRAND ISLAND	MONTHLY INSURANCE - JUNE 2017	06/07/2017	47.80
ACH	PLIC-SBD GRAND ISLAND	MONTHLY INSURNACE - JULY 2017	06/29/2017	47.80
ACH	PUBLIC EMPLOYEES RETIREMENT	UNFUNDED ACCRUED LIABILITY FOR RATE PLAN ID 26407	06/26/2017	20,353.85
		Total for Department: 00		**20,468.01**
Department: 20 BOARD				
53508	MIGUEL GASCA	REIMB FOR TRAVEL EXPENSES-SPECIAL DISTRICTS LEGISLATIVE DAYS	06/07/2017	470.95
53509	HAYDEN HAMILTON	REIMBURSEMENT FOR TRAVEL EXPENSES - SPECIAL DISTRICT LEGISLATIVE	06/07/2017	121.41
53519	UNION BANK (VISA)	BOARD MEMBER CONFERENCE - SHERATON HOTEL STAY	06/07/2017	3,186.46
53571	COUNCIL OF WATER UTILITIES	6/20/17 COUNCIL OF WATER UTILITIESE MTG-STEWART & GASCA	06/21/2017	50.00
		Total for Department: 20 BOARD		**3,828.82**
Department: 36 GARAGE				
ACH	ANELLE MANAGEMENT SERVICES	ESW HORIZON SPARE DPF	06/07/2017	3,277.14
ACH	ANELLE MANAGEMENT SERVICES	CERTIFIED OPACITY TEST INSPECTIONS FOR UNITS #21, 22, 32, 33, 36	06/12/2017	330.00

ACH	BP BATTERY	BOOSTER PACK - NOCO LITHIUM GB150 PRO JUMPER STARTER	06/12/2017	419.16
ACH	FLYERS ENERGY LLC	FUEL & OIL, ORDER #162892-17	06/02/2017	1,287.17
ACH	FLYERS ENERGY LLC	FUEL & OIL, ORDER #168308-17	06/07/2017	1,682.39
ACH	FLYERS ENERGY LLC	FUEL & OIL, ORDER #171461-17	06/12/2017	689.72
ACH	FLYERS ENERGY LLC	FUEL & OIL, ORDER #177256-17	06/14/2017	1,603.73
ACH	FLYERS ENERGY LLC	FUEL & OIL, ORDER #17-484387	06/21/2017	985.01
ACH	FLYERS ENERGY LLC	FUEL & OIL, ORDER #183553-17	06/27/2017	756.57
ACH	FLYERS ENERGY LLC	FUEL & OIL, ORDER #186170-17	06/29/2017	1,831.40
ACH	HAWTHORNE MACHINERY COMPANY	EQUIPMENT RENTAL FROM 6/13/17 THRU 6/14/17	06/21/2017	1,774.30
ACH	O'REILLY AUTO PARTS	AIR FILTER	06/07/2017	41.99
ACH	O'REILLY AUTO PARTS	OREILLY USING WRONG PO NUMBER - INTERNAL ACCT ADJ	06/21/2017	439.53
ACH	O'REILLY AUTO PARTS	OIL FILTER, AIR FILTER, CABIN FILTER	06/27/2017	63.31
ACH	PARKHOUSE TIRE, INC.	225/70R19.5 G CONT HSR, RECYCLING FEE, FLEET SERVICE	06/02/2017	1,426.53
ACH	QUALITY CHEVROLET	CONNECT	06/12/2017	180.63
53486	HARRISON'S EQUIPMENT	LABOR - REPAIR.SONIC CLEAN CARBURETOR, REBUILD CARBURETOR, CLEAN	06/02/2017	296.70
53517	THE WELD SHOP, INC	GAS LINE REEL BRACKET	06/07/2017	150.00
53524	ABABA BOLT	UNIT 71 M12-1.75 X 70 H/C 10.9 ZNC	06/12/2017	9.98
53531	NETWORK FLEET, INC.	MONTHLY AIRTIME CHARGES FOR GPS TRACKING - JUN 2017	06/12/2017	780.00
53547	FALLBROOK AUTO PARTS	SPARK PLUG, NAPA RUGLYDE 1GAL	06/14/2017	152.10
53552	HEAVY VEHICLE ELECTRONIC LICENSE PLATE	MONTHLY SERVICE - MAY	06/14/2017	17.65
53574	FORD OF ESCONDIDO	WEATHER	06/21/2017	46.96
53577	JAUREGUI & CULVER, INC.	PERFORMED TRAINING WITH SITE PERSONAL ON GASBOY FUEL MGNMNT SYST	06/21/2017	99.50
53604	HOME DEPOT	STEPBIT #4, CNTRSNK	06/29/2017	60.58
53614	ZEP MANUFACTURING CO.	ZEP CLEAN'EMS 6TUB	06/29/2017	148.20
		Total for Department: 36 GARAGE		**18,550.25**

Department: 41 ADMINISTRATION

ACH	ACCELA, INC. #774375	WEB PAYMENTS WITH ONLINE-BILLS.COM	06/14/2017	2,099.00
ACH	DATAPROSE INC.	MONTHLY MAILING OF WATER BILLS AND NEWSLETTER	06/07/2017	1,145.40
ACH	IMAGE SOURCE	MONTHLY COPY COUNT	06/21/2017	457.41
ACH	PUBLIC EMPLOYEES RETIREMENT	CALPERS REPLACEMENT BENEFIT FUND: D. SEYMOUR	06/26/2017	355.10
ACH	SHEPHERD & STAATS, INC.	ADMINISTRATIVE SERVICES	06/12/2017	1,250.00
ACH	SOUTHWEST ANSWERING SERVICE, INC.	MONTHLY ANSWERING SERVICE	06/07/2017	1,031.14
ACH	SOUTHWEST ANSWERING SERVICE, INC.	MONTLY ANSWERING SERVICE	06/29/2017	1,017.79
ACH	SPECIAL DISTRICT RISK	PROPERTY/LIABILITY PACKAGE PROGRAM YEAR 2017-18	06/02/2017	338,094.26
ACH	STREAMLINE	MONTHLY WEB MANAGEMENT	06/21/2017	300.00
ACH	WESTERN LANDSCAPE MAINTENANCE PLUS, INC.	LANDSCAPE MAINTENANCE SERVICE	06/07/2017	507.15
ACH	WESTERN LANDSCAPE MAINTENANCE PLUS, INC.	LANDSCAPE MAINTENANCE SERVICE	06/29/2017	507.15
ACH	XEROX CORP.	MONTHLY LEASE	06/12/2017	1,377.04
53494	POWELL'S OFFICE FURNITURE	PARTITION WALL, STRAGE HUTCH, SERIES DOOR SET, DELIVERY & INSTAL	06/02/2017	918.94
53495	SOFTCHOICE CORPORATION	MS ENTERPRISE WINDOWS SERVER LICENSING	06/02/2017	689.76
53499	ADECCO USA, INC	STAFFING WE 5/28/17: A. ACHARTZ & A. LOPEZ ZAMORANO (CS CLERKS)	06/07/2017	4,172.80
53502	BONSALL PEST CONTROL	TARGET PEST BEES	06/07/2017	150.00
53505	COVERALL NORTH AMERICA, INC.	SPECIAL COMMERCIAL CLEANING SERVICES	06/07/2017	1,188.05
53506	FALLBROOK WASTE AND RECYCLING	MONTHLY REFUSE AND RECYCLE	06/07/2017	345.60
53507	GARY & JUDY FATLAND	SETTLEMENT FOR DAMAGES DUE TO WATERLINE BREAK	06/07/2017	6,550.00
53511	ROBERT & JUDITH LOSER	SETTLEMENT FOR DAMAGES DUE TO A BROKEN MAINLINE PIPE	06/07/2017	1,095.74
53513	QUALITY GATE COMPANY	QUARTYERLY FULL GATE MAINTENANCE-LIFT STATION	06/07/2017	333.00
53515	SAN DIEGO GAS & ELECTRIC	MONTHLY ELECTRIC SERVICE ACCT 4065 592 756 6	06/07/2017	4,193.57
53519	UNION BANK (VISA)	LINEN TABLE SKIRT, CLIP, TABLE CLOTH	06/07/2017	2,861.18
53521	UNION BANK (VISA)	SOP TRAINING - CYNTHIA GRAY	06/07/2017	395.00
53522	UNION BANK (VISA)	NEGOTIATIONS MEETING - LUNCH 5/16/17	06/07/2017	300.13
53527	CAPITAL ONE COMMERCIALS	MISC KITCHEN SUPPLIES	06/12/2017	1,379.78
53528	COVERALL NORTH AMERICA, INC.	MONTHLY SERVICE	06/12/2017	995.00

53530	MODULAR BUILDING CONCEPTS, INC	RENTAL AGREEMENT	06/12/2017	793.03
53533	PITNEY BOWES INC.	LEASE AGREEMENT	06/12/2017	686.82
53536	VILLAGE NEWS	LEGALS: PUBLICATION 6/1/17	06/12/2017	150.00
53537	VISTA FLOOD RESTORATION, INC.	CLEAN & REPAIR DAMAGE ON PROPERTY: 1059 LITTLE GOPHER CANYON RD	06/12/2017	18,610.47
53539	ADECCO USA, INC	STAFFING: A. ACHARTZ & A. LOPEZ ZAMORANO (CS CLERKS)	06/14/2017	1,669.12
53540	ASCOT PARK ESTATES HOA	SETTLEMENT FOR DAMAGES DUE TO EXCESSIVE WATER PRESSURE	06/14/2017	3,252.07
53542	BONSALL PEST CONTROL	MONTHLY PEST CONTROL	06/14/2017	90.00
53545	DELL BUSINESS CREDIT	POWER EDGE SERVER, ITEM RETURNED, OUTLET, CARTRIDGE	06/14/2017	1,207.22
53546	ED SHOBE PLUMBING	REPAIR WOMENS TOILET TRAILER 1-A	06/14/2017	100.00
53548	FALLBROOK WASTE AND RECYCLING	LOAD 40 YD, LF 7.72 TONS, LOAD 40 YD	06/14/2017	1,241.80
53555	HOME DEPOT	FXWTC, 60 DL G25	06/14/2017	56.59
53557	MITEL LEASING	LEASE AGREEMENT	06/14/2017	287.19
53562	SHRED-IT USA LLC	MONTHLY SERVICE AGREEMENT	06/14/2017	133.40
53564	TIME WARNER CABLE	MONTHLY INTERNET CONNECTION - JUNE	06/14/2017	1,250.00
53567	AT&T	MONTHLY PHONE SERVICE	06/21/2017	165.81
53568	AT&T	MONTHLY PHONE SERVICE	06/21/2017	553.19
53569	AT&T LONG DISTANCE	MONTHLY PHONE SERVICE	06/21/2017	16.12
53571	COUNCIL OF WATER UTILITIES	6/20/17 COUNCIL OF WATER UTILITIESE MTG-T KENNEDY	06/21/2017	25.00
53573	CSDA, SAN DIEGO CHAPTER	CSDA MEMBERSHIP RENEWAL	06/21/2017	150.00
53581	SAN DIEGO COUNTY ASSESSOR/RECORDER/CLERK	PROCESSING FEE FOR RECORDING RELEASE OF LIEN DOC (4)	06/21/2017	52.00
53582	THE CARLSON COMPANY	JANITORIAL SUPPLIES - RESTOCK, TOILET PAPER, HAND SOAP, CLEANERS	06/21/2017	408.57
53583	THE HOWARD E. NYHART COMPANY, INC	SERVICES PROVIDED 5/1/17-5/31/17: BOARD PRESENTATION, STUDY BENC	06/21/2017	8,288.00
53586	XEROX FINANICAL SERVICES	MONTHLY LEASE	06/21/2017	565.83
53587	ADECCO USA, INC	STAFFING: A. ACHARTZ & A. LOPEZ-ZAMORANO (CS CLERKS)	06/27/2017	4,172.80
53596	SAN DIEGO COUNTY FARM BUREAU	REGIONAL AGRICULTURAL WATER MANAGEMENT PLAN PREPARATION	06/27/2017	17,001.19
53606	JEFF STACY	REIMB FOR LUNCH ON 6/20/17 FOR GROUP OF 5 FROM AWWA TRAINING	06/29/2017	13.45
53611	UNION BANK (VISA)	GM LUNCH EN ROUTE TO AWWA	06/29/2017	1,137.18
53612	UNION BANK (VISA)	ANNIVERSARY BREAKFAST	06/29/2017	190.40
53613	VERIZON WIRELESS	NEW CELL PHONE (D.HILL) & 5 IPADS (BOARD MEMBERS)	06/29/2017	4,170.63
		Total for Department: 41 ADMINISTRATION		**440,147.87**

Department: 43 SAFETY

ACH	ALL THINGS FALLBROOK	NAVY BLUE BALLCAPS WITH RMWD LOGO (S/M/L/XL)	06/29/2017	671.82
ACH	KNIGHT SECURITY & FIRE SYSTEMS	REPAIR OF UPPER YARD BEAM	06/14/2017	110.00
ACH	T.R.Y. ENTERPRISES, INC.	PATROL SERVICES 6/1/17-6/30/17: DISTRICT AND HUNTLEY	06/21/2017	985.00
53484	BOOT BARN INC	BOOTS: C WAITE	06/02/2017	150.00
53500	ALERT LOCKSMITH	REPAIR NORTH ENTRY DOOR LOCKSET	06/07/2017	90.00
53512	OCCUPATIONAL HEALTH CENTERS OF CA, A MEDICAL CORP	SERVICES PERFORMED AT CMC	06/07/2017	80.00
53575	GIL FRANCO, TIRE HAULER	RECYCLING & DISPOSAL OF USED DISTRICT PASSENGER TIRES AND LIGHT	06/21/2017	110.00
53578	OCCUPATIONAL HEALTH CENTERS OF CA, A MEDICAL CORP	SERVICES PERFORMED AT CMC	06/21/2017	80.00
53598	ALERT LOCKSMITH	KEYS MADE FOR WATERS OPS FOR WAREHOUSE ENTRY	06/29/2017	28.15
53602	HEALTH-METRICS, INC	ANNUAL HEARING TESTS	06/29/2017	650.00
53604	HOME DEPOT	(2) 9' ALUM UMB	06/29/2017	193.95
53606	JEFF STACY	REIMB FOR LUNCH ON 6/20/17 FOR GROUP OF 5 FROM AWWA TRAINING	06/29/2017	13.45
		Total for Department: 43 SAFETY		**3,162.37**

Department: 51 FINANCE

ACH	DATAPROSE INC.	MONTHLY MAILING OF WATER BILLS AND NEWSLETTER	06/07/2017	3,648.17
53605	INFOSEND, INC.	UTILITY BILLING - POSTAGE DEPOSIT	06/29/2017	5,968.00
		Total for Department: 51 FINANCE		**9,616.17**

Department: 52 CUSTOMER SERVICE

ACH	DATAPROSE INC.	MONTHLY MAILING OF WATER BILLS AND NEWSLETTER	06/07/2017	1,987.63
ACH	MISSION RESOURCE CONSERVATION DISTRICT	HOME WATER USE EVALUATIONS - MAY 2017	06/07/2017	371.00
ACH	TCN, INC	MONTHLY 48 HOUR NOTICE CALLS	06/07/2017	22.33
53521	UNION BANK (VISA)	SOP TRAINING - KENNY DIAZ	06/07/2017	395.00
53606	JEFF STACY	REIMB FOR LUNCH ON 6/20/17 FOR GROUP OF 5 FROM AWWA TRAINING	06/29/2017	13.44
		Total for Department: 52 CUSTOMER SERVICE		**2,789.40**

Department: 91 ENGINEERING

ACH	RAFTELIS FINANCIAL CONSULTANTS	REVIEW AND IMPLEMENTATION OF WATER CAPACITY FEES	06/27/2017	6,625.00
53487	HOCH CONSULTING	AS-NEEDED CONSTRUCTION INSPECTION SERVICES	06/02/2017	19,292.86
53490	INFRASTRUCTURE ENGINEERING	MOOSA CREST WATERLINE DESIGN	06/02/2017	26,621.99
53504	COPY 2 COPY	MOOSA CREST WATERLINE EMERGENCY PROJECT-BID DOCS/PLANS (13 SETS)	06/07/2017	744.21
53510	INFRASTRUCTURE ENGINEERING	R.A. WEESE FILTRATION PLANT INTERCONNECT PROJECT	06/07/2017	7,440.50
53518	TORY R. WALKER ENGINEERING, INC.	MOOSA CANYON HYDROLOGIC ANALYSIS	06/07/2017	8,137.50
53521	UNION BANK (VISA)	SOP TRAINING - GLORIA DECHERT	06/07/2017	395.00
53549	FEDEX	DELIVERY SERVICE	06/14/2017	35.39
53554	DAVID HILL	REIMBURSEMENT FOR WATERWORKS MATH 50 CLASS FEES	06/14/2017	206.00
53576	HDR ENGINEERING, INC.	CONDITION ASSESSMENT OF WATER FACILITIES	06/21/2017	4,659.50
53592	HAZEN AND SAWYER	HYDRAULIC MODEL TRAINING AND HYDRAULIC MODELING SUPPORT	06/27/2017	2,497.50
53595	MICHAEL POWERS	AWWA ANNUAL CONFERENCE AND EXHIBITION 17 EXPENSE REIMBURSEMENT	06/27/2017	2,131.20
53606	JEFF STACY	REIMB FOR LUNCH ON 6/20/17 FOR GROUP OF 5 FROM AWWA TRAINING	06/29/2017	13.44
53608	MICHAEL POWERS	REIMB FOR TUITION FEES FOR CSUSM SURVEY OF WATER MNGMNT CLASS	06/29/2017	948.72
		Total for Department: 91 ENGINEERING		**79,748.81**
		Total for Fund:03 GENERAL FUND		**578,311.70**

Fund: 13 STATE REVOLVING FUNE LOAN BECK
Department: 00

ACH	STATE WATER RESOURCES CONTROL BOARD	PRINCIPAL MORRO - SRF LOAN	06/05/2017	314,858.80
ACH	STATE WATER RESOURCES CONTROL BOARD	PRINCIPAL MORRO - SRF LOAN	06/30/2017	2.66
53566	WELLS FARGO BANK	ADMINISTRATIVE CHARGE FOR CORP TRUST SERVICE - MORROW	06/14/2017	1,000.00
		Total for Department: 00		**315,861.46**
		Total for Fund:13 STATE REVOLVING FUNE LOA		**315,861.46**

Fund: 39 SRF LOAN MORRO
Department: 00

ACH	STATE WATER RESOURCES CONTROL BOARD	PRINCIPAL BECK - SRF LOAN	06/05/2017	237,585.47
ACH	STATE WATER RESOURCES CONTROL BOARD	PRINCIPAL BECK - SRF LOAN	06/30/2017	2.00
		Total for Department: 00		**237,587.47**
		Total for Fund:39 SRF LOAN MORRO		**237,587.47**

Fund: 52 SEWER CAPITAL REPLACEMENT
Department: 00

ACH	COMMONWEALTH LAND TITLE COMPANY	PAYMENT FOR PURCHASE OF THE LS1A PROPERTY APN 126-452-01	06/27/2017	740,000.00

			Total for Department: 00		**740,000.00**
			Total for Fund:52 SEWER CAPITAL REPLACEMEN		**740,000.00**
Fund: 53 SEWER CAPITAL EXPANSION					
Department: 00					
53520	UNION BANK (VISA)	CVR RAINBOW MWD SEWER, FRAME, OUTER COVER		06/07/2017	1,285.25
			Total for Department: 00		**1,285.25**
			Total for Fund:53 SEWER CAPITAL EXPANSION		**1,285.25**
Fund: 60 WTR CAP EXPANSION/REPLACEMENT					
Department: 00					
ACH	PSOMAS	GIRD/MONSERATE HILL WATERLINE DESIGN		06/02/2017	2,286.50
53510	INFRASTRUCTURE ENGINEERING	PUMP STATION #1 NATURAL GAS MOTOR REPLACEMENTS		06/07/2017	11,760.51
53584	TRENCH SHORING CO	PRESSURE STATION INSTALLATION - VISTA VALLEY		06/21/2017	1,875.00
			Total for Department: 00		**15,922.01**
			Total for Fund:60 WTR CAP EXPANSION/REPLAC		**15,922.01**
			Grand Total		**4,750,341.13**

Comparative Water Sales YTD from Prior Years

FISCAL YEAR 2016-2017

Quantity of Meters	User Code	JUL	AUG	SEP	OCT	NOV	DEC	JAN	FEB	MAR	APR	MAY	JUN	Acre Feet
591	AD	36216	34134	39119	28217	22903	24494	7934	5036	5338	17861	23635	26725	624
403	AG	156957	152359	172040	132882	104544	96050	31370	16829	20790	87717	108448	103638	2,717
5	C	0	0	0	0	0	0	0	0	0	0	0	0	-
231	CM	47830	45043	43040	26707	20970	21140	5876	4333	4912	14068	19093	20893	629
30	CN	4900	4950	7309	11456	7426	561		63	924	815	1545	686	93
24	IS	3806	3701	3980	3061	2446	1653	1408	594	700	1942	1382	2524	62
88	MF	11307	11657	13746	10597	8876	11213	7139	7047	5954	8981	9382	10560	267
326	SC	183744	166212	206354	150910	121456	115009	18861	6544	81497	102350	137573	132987	3,268
1034	SD	279246	253718	298226	222243	181674	171322	39597	18148.3	21918.4	127268	178858	181230	4,530
5122	SF	187516	175736	202555	154361	120520	133125	57385	42596	40254	103952	130470	144885	3,428
7854	Total	911522	847510	986369	740434	590815	574567	169570	101190	182287	464954	610386	624128	15,619

FISCAL YEAR 2015-2016

Quantity of Meters	User Code	JUL	AUG	SEP	OCT	NOV	DEC	JAN	FEB	MAR	APR	MAY	JUN	Acre Feet
601	AD	29891	26212	33050	25166	24907	20638	12532	10056	19640	18699	22364	28454	624
404	AG	143174	124130	153414	124219	109795	85664	48608	35648	94227	87294	100071	115017	2,804
6	C	4342	3764	4773	2948	1761	665	428	0	0	0	0	0	43
221	CM	28620	33259	34668	28374	14569	11399	8431	8591	11738	13519	20166	35354	571
37	CN	6680	7040	5931	3994	5788	3061	1002	1129	781	2559	2466	5079	104
24	IS	2773	2779	2486	3073	3299	2641	828	796	2141	1784	2271	3340	65
88	MF	11351	10279	10887	9952	9664	8600	8072	6667	7745	8832	8484	10116	254
326	SC	162756	144892	188145	132002	133998	109284	46707	38985	108085	92783	115815	137589	3,239
1038	SD	245736	213120	257965	197426	188412	162042	82599	57837	154618	131816	168901	205564	4,743
5092	SF	148573	143404	162621	135030	120706	96899	69380	52522	95133	95996	110843	142655	3,154
7837	Total	783896	708879	853940	662184	612899	500893	278587	212231	494108	453282	551381	683168	15,600

FISCAL YEAR 2014-2015

Quantity of Meters	User Code	JUL	AUG	SEP	OCT	NOV	DEC	JAN	FEB	MAR	APR	MAY	JUN	Acre Feet
426	A	118146	136346	116938	122567	99702	62354	19943	44790	50073	88589	89259	50899	2,295
341	C	102461	111946	90197	95608	76060	51612	29802	38013	48038	79301	93234	56214	2,003
36	CN	3175	3510	3579	2898	1119	372	1	0	22	1943	2925	8227	64
5558	D	220019	244786	204723	208649	178916	121527	67259	80149	98723	153107	162560	99419	4,224
96	MF	15917	16081	14016	14241	13689	10249	8659	8017	8763	13075	12905	8940	332
323	SC	207708	245358	221301	241409	186106	108701	25015	79139	84982	166849	168519	89560	4,189
1040	SD	284083	332533	282418	297792	260513	165578	46135	109682	137028	236291	250300	134190	5,823
7820	Total	951509	1090560	933172	983164	816105	520393	196814	359790	427629	739155	779702	447449	18,929

FISCAL YEAR 2013-2014

Quantity of Meters	User Code	JUL	AUG	SEP	OCT	NOV	DEC	JAN	FEB	MAR	APR	MAY	JUN	Acre Feet
426	A	130393	132497	140319	122581	96941	51347	71276	81582	56931	61956	110494	123290	2,708
340	C	90317	89194	104313	86744	69704	35242	44886	34899	56147	54616	82751	109178	1,970
36	CN	2965	1618	1737	1857	2284	15	1519	1101	67	798	1706	4044	45
5558	D	225641	246575	245482	210918	178078	101726	123160	142121	107350	114416	190761	224500	4,846
96	MF	14703	17278	17433	14438	14631	9475	11113	9537	9765	9486	14482	17487	367
323	SC	197030	222678	232163	204607	160984	95935	144898	137843	135058	119791	211302	221498	4,784
1040	SD	293327	327443	324488	276743	237162	132450	171852	204192	148580	146423	272782	299556	6,508
7819	Total	954376	1037283	1065935	917888	759784	426190	568704	611275	513898	507486	884278	999553	21,227

Comparative Water Sales YTD from Prior Years

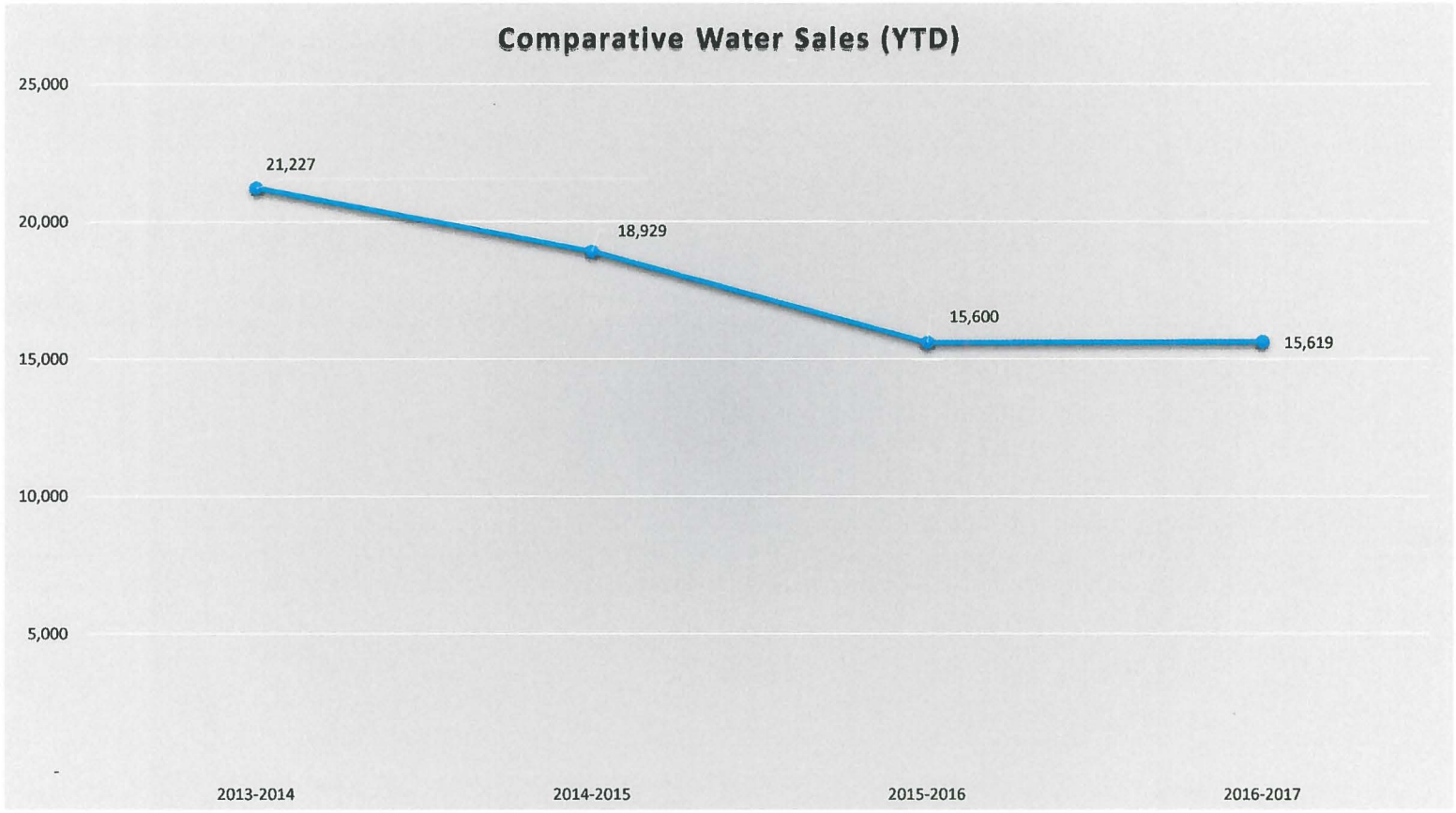

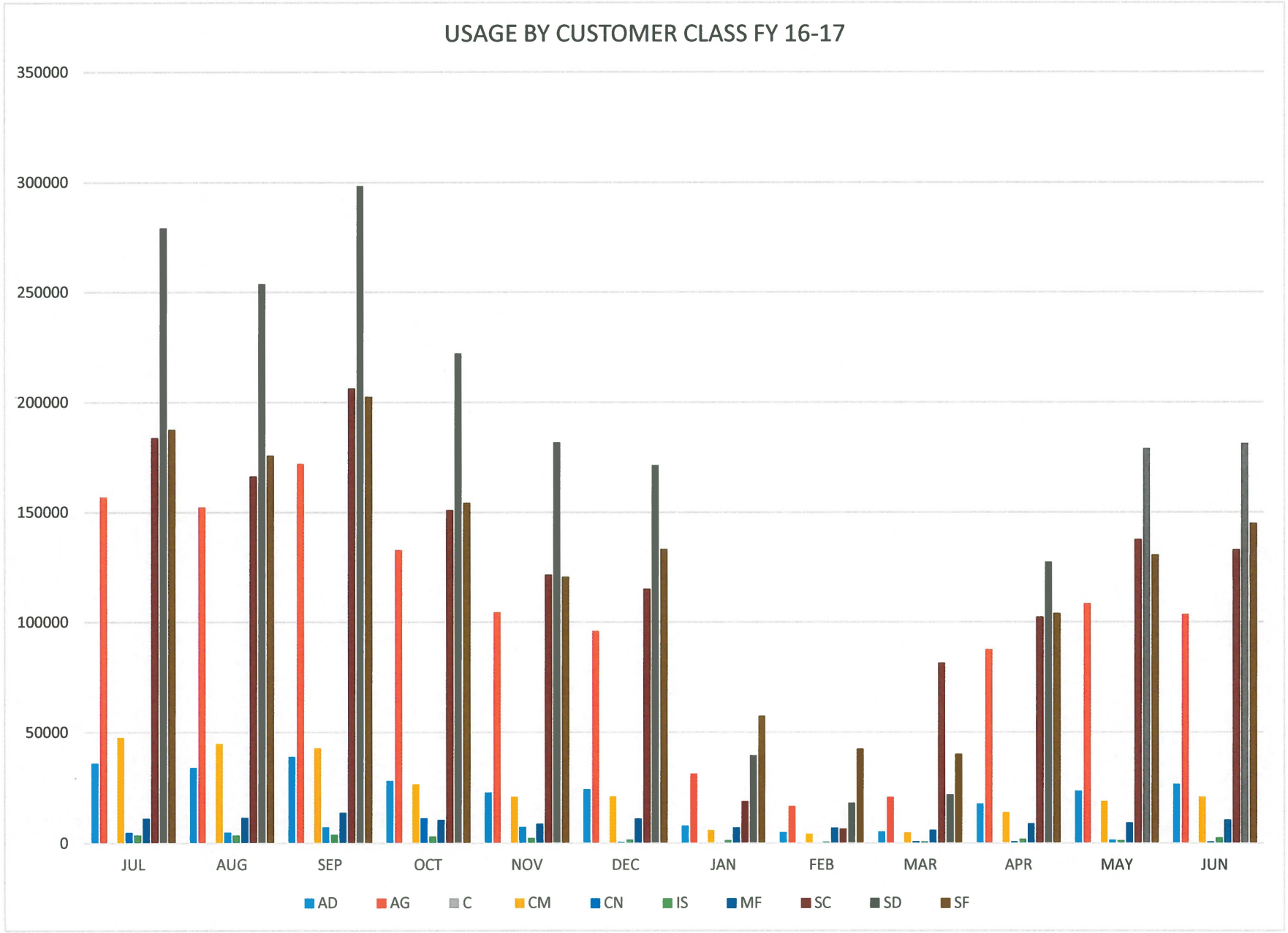
USAGE BY CUSTOMER CLASS FY 16-17
350000
300000
250000
200000
150000
100000
50000
0
JUL
AUG
SEP
OCT
NOV
DEC
JAN
FEB
MAR
APR
MAY
JUN
AD
AG
C
CM
CN
IS
MF
SC
SD
SF

RAINBOW MUNICIPAL WATER DISTRICT
Committed to Excellence

SEWER EQUIVALENT DWELLING UNITS (EDUs) STATUS REPORT
JULY 2017

STATUS SUMMARY	EDUs
Total Treatment Capacity Purchased from Oceanside	8,333.33
Less 5% Contractual Allowance	416.67
EDUs Set Aside by Board for Emergencies	60.00
EDUs Connected	3,933.34
EDUs Unconnected	1,277.96
Total EDUs Available for Purchase:	**2,645.37**

DEVELOPMENTS WITH UNCONNECTED EDUs	EDUs	CAPACITY FEES PAID	
Others (Misc. SFR)	21.40	$ 320,034	
Golf Green Estates (Dev. Solutions)	102.46	$ 1,777,700	
Horse Creek Ridge/ Passarelle	850.57	$ -	
Palomar College	100.00	$ -	
Polo Club (Vista Valley Dev.)	59.85	$ 1,022,775	
Pala Mesa Highlands (Beazer Homes)	124.00	$ 965,007	*
Lake Vista Estates (Arestad 1.48)/Johansson 1.2)	2.68	$ 45,890	
Vista Valley Country Club	5.00	$ 85,450	
Silver Holdings	9.00	$ 153,810	
VNUIT LLC (Kakileti)	3.00	$ 51,270	
TOTAL UNCONNECTED:	**1,277.96**	**$ 4,421,936**	

*Deferred Total Payment until Building Permits are Issued.